vibe

Vibe Kit 05

Foreground:
Total graphic area: 116.5”w X 98.25”h
Total visual opening: 112.5”w X 94.25”h
See foreground template for specifics curves & dimension

Background:
Total graphic area: 118”w X 96”h
Total visual opening: 114”w X 92”h

Counter will be constructed & finished with a laminate.

Please be sure to include the 2” bleed around the perimeter to compensate for the finishing of large graphics. Do not design any critical elements (text, logos, etc.) within 2” of the edge (see dotted lines).

This template displays the whole pulse kit 5 structure for reference of counter and overlapping elements. Please save final artwork files with proper bleeds in the individual templates.

General Artwork Guidelines
- cmyk color mode
- do not embed images, supply them
- resolution must be 100-120 ppi
- all fonts must be created to outlines

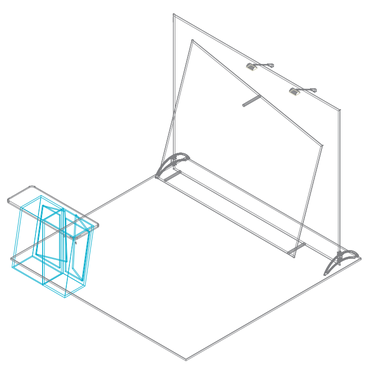

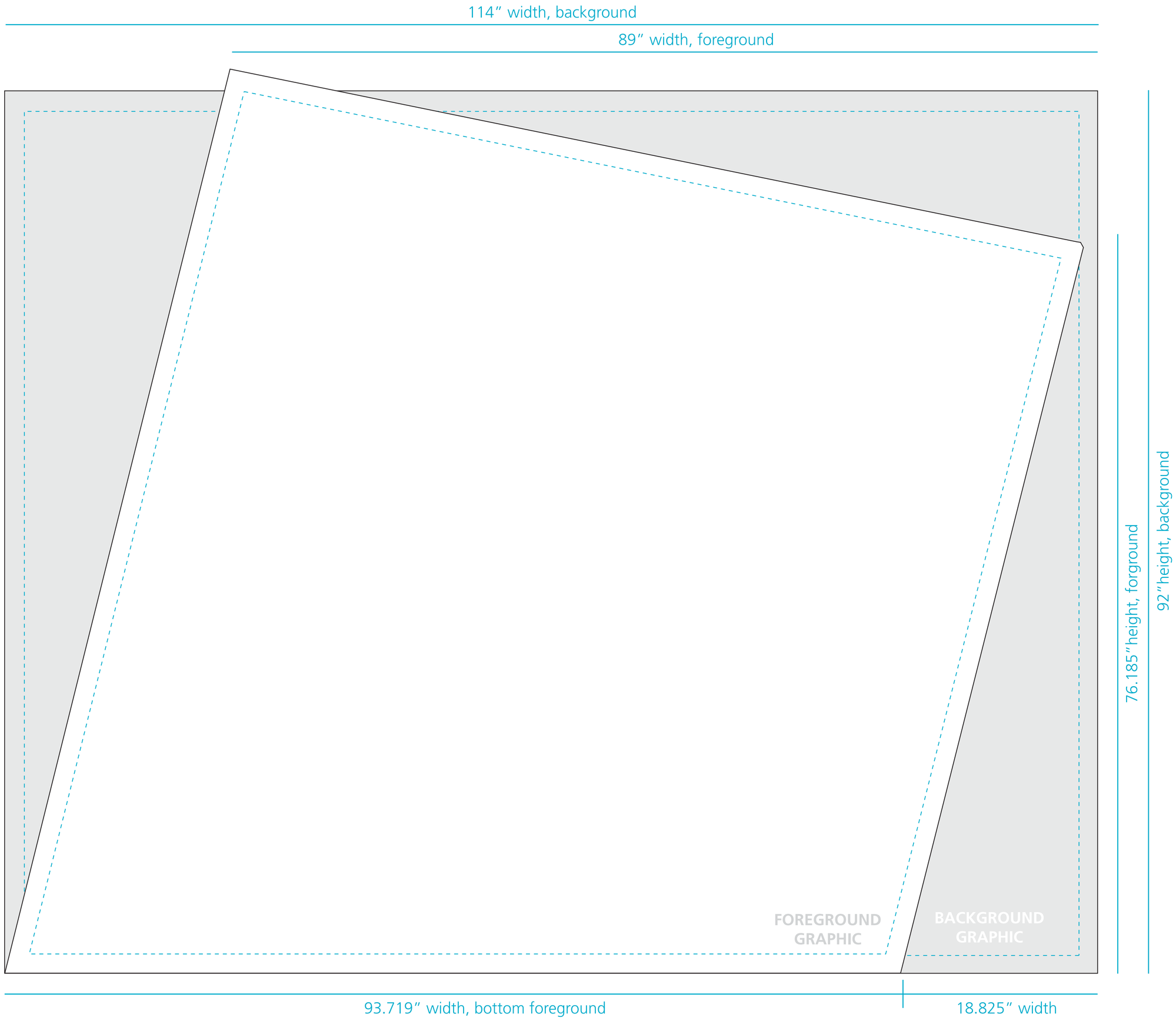

REMINDER: This template is only to view obstructions & layers. Please do not design final artwork in this template. See separate files for final layout.