‘C’ Curve Hanging Structures

CRV
C Curve tension fabric hanging structures are made in the USA and are of the utmost quality and durability. State-of-the-art zipper pillowcase dye-sublimated stretch fabric coverings are combined with advanced, lightweight aluminum structures to provide unique design, functionality, and style. Hanging structures are offered in a wide variety of shapes and sizes. Stretch fabric graphics are hand-sewn, durable and dry-cleanable.

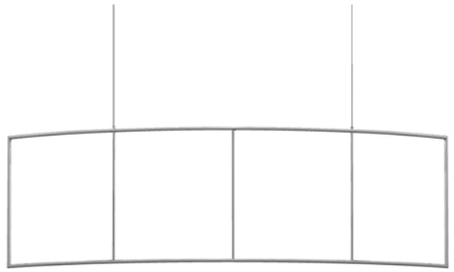

Frame

Single sided & double sided graphic

30mm tube push-button connector

50mm tube spigot connector

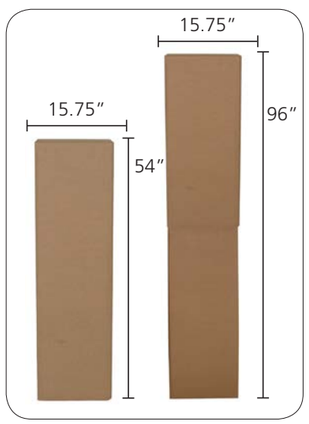

Hanging Structure standard box

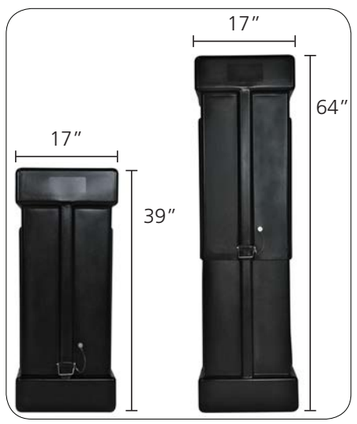

CE Expandable Display Case -
Available as an upgrade

We are continually improving and modifying our product range and reserve the right to vary the specifications without prior notice.
All dimensions and weights quoted are approximate and we accept no responsibility for variance. E&OE. See Graphic Templates for graphic bleed specifications.

features and benefits:

- C curve hanging structures come in 8’, 10’, 12’, 14’, 16’, 18’ & 20’ width configurations at varying heights of 2’, 3’, 4’, 5’ & 6’
- Shapes 12’ width and under are constructed with 30mm (1 1/8”) tubes and push-button connectors for simple assembly
- Shapes 14’ width and over are constructed with 50mm (2”) tubes and internal expanding spigot connectors for unmatched structural integrity
- Engineer certified (structural engineer certificate available upon request)
- Zippered pillowcase fabric graphic options include: unprinted (white and black), single-sided (outer panel printed only) and double-sided (inner and outer panels printed).
- All pillowcase graphics come standard with opaque liner
- Comes standard with hanging hardware, bags and heavy-duty shipping and storage box(es)
- OCE Expandable rugged molded shipping cases available as an upgrade
- Collapses to a fraction of its size
- Easy to store and ship
- Quick to set up

dimensions:

Hardware can be found on page 2

Graphic dimensions can be found in the graphic templates,
which can be viewed at www.exhibitors-handbook.com/graphic-templates

Graphic Material:
5 oz. Soft Knit Dye-sublimated zipper pillowcase fabric

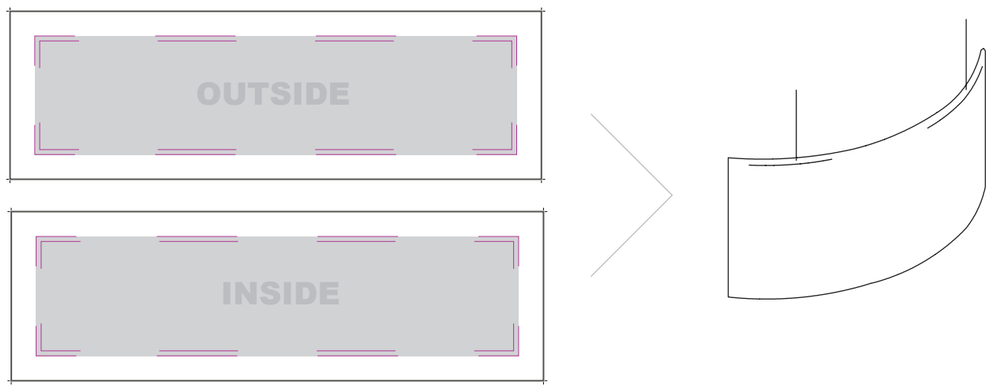

CRV-8′ WIDTH							
HEIGHT	HARDWARE CODE	# OF BOXES OR CASES	UNPRINTED GRAPHIC CODE	SINGLE-SIDED GRAPHIC CODE	OUTER GRAPHIC SPECS	DOUBLE-SIDED GRAPHIC CODE	INSIDE GRAPHIC SPECS
2′	CRV-0802	1	CRV-0802-U	CRV-0802-G	111.3″W X 24″H	CRV-0802-GDBL	109.1″W X 24″H
3′	CRV-0803	1	CRV-0803-U	CRV-0803-G	111.3″W X 36″H	CRV-0803-GDBL	109.1″W X 36″H
4′	CRV-0804	1	CRV-0804-U	CRV-0804-G	111.3″W X 48″H	CRV-0804-GDBL	109.1″W X 48″H
5′	CRV-0805	1	CRV-0805-U	CRV-0805-G	111.3″W X 60″H	CRV-0805-GDBL	109.1″W X 60″H
6′	CRV-0806	1	CRV-0806-U	CRV-0806-G	111.3″W X 72″H	CRV-0806-GDBL	109.1″W X 72″H

CRV-10′ WIDTH							
HEIGHT	HARDWARE CODE	# OF BOXES OR CASES	UNPRINTED GRAPHIC CODE	SINGLE-SIDED GRAPHIC CODE	OUTER GRAPHIC SPECS	DOUBLE-SIDED GRAPHIC CODE	INSIDE GRAPHIC SPECS
2′	CRV-1002	1	CRV-1002-U	CRV-1002-G	139.1″W X 24″H	CRV-1002-GDBL	136.9″W X 24″H
3′	CRV-1003	1	CRV-1003-U	CRV-1003-G	139.1″W X 36″H	CRV-1003-GDBL	136.9″W X 36″H
4′	CRV-1004	1	CRV-1004-U	CRV-1004-G	139.1″W X 48″H	CRV-1004-GDBL	136.9″W X 48″H
5′	CRV-1005	1	CRV-1005-U	CRV-1005-G	139.1″W X 60″H	CRV-1005-GDBL	136.9″W X 60″H
6′	CRV-1006	1	CRV-1006-U	CRV-1006-G	139.1″W X 72″H	CRV-1006-GDBL	136.9″W X 72″H

CRV-12′ WIDTH							
HEIGHT	HARDWARE CODE	# OF BOXES OR CASES	UNPRINTED GRAPHIC CODE	SINGLE-SIDED GRAPHIC CODE	OUTER GRAPHIC SPECS	DOUBLE-SIDED GRAPHIC CODE	INSIDE GRAPHIC SPECS
2′	CRV-1202	1	CRV-1202-U	CRV-1202-G	166.9″W X 24″H	CRV-1202-GDBL	164.7″W X 24″H
3′	CRV-1203	1	CRV-1203-U	CRV-1203-G	166.9″W X 36″H	CRV-1203-GDBL	164.7″W X 36″H
4′	CRV-1204	1	CRV-1204-U	CRV-1204-G	166.9″W X 48″H	CRV-1204-GDBL	164.7″W X 48″H
5′	CRV-1205	1	CRV-1205-U	CRV-1205-G	166.9″W X 60″H	CRV-1205-GDBL	164.7″W X 60″H
6′	CRV-1206	1	CRV-1206-U	CRV-1206-G	166.9″W X 72″H	CRV-1206-GDBL	164.7″W X 72″H

CRV-14′ WIDTH							
HEIGHT	HARDWARE CODE	# OF BOXES OR CASES	UNPRINTED GRAPHIC CODE	SINGLE-SIDED GRAPHIC CODE	OUTER GRAPHIC SPECS	DOUBLE-SIDED GRAPHIC CODE	INSIDE GRAPHIC SPECS
2′	CRV-1402	1	CRV-1402-U	CRV-1402-G	194.7″W X 24″H	CRV-1402-GDBL	191.1″W X 24″H
3′	CRV-1403	1	CRV-1403-U	CRV-1403-G	194.7″W X 36″H	CRV-1403-GDBL	191.1″W X 36″H
4′	CRV-1404	1	CRV-1404-U	CRV-1404-G	194.7″W X 48″H	CRV-1404-GDBL	191.1″W X 48″H
5′	CRV-1405	1	CRV-1405-U	CRV-1405-G	194.7″W X 60″H	CRV-1405-GDBL	191.1″W X 60″H
6′	CRV-1406	1	CRV-1406-U	CRV-1406-G	194.7″W X 72″H	CRV-1406-GDBL	191.1″W X 72″H

CRV-16′ WIDTH							
HEIGHT	HARDWARE CODE	# OF BOXES OR CASES	UNPRINTED GRAPHIC CODE	SINGLE-SIDED GRAPHIC CODE	OUTER GRAPHIC SPECS	DOUBLE-SIDED GRAPHIC CODE	INSIDE GRAPHIC SPECS
2′	CRV-1602	1	CRV-1602-U	CRV-1602-G	222.6″W X 24″H	CRV-1602-GDBL	218.9″W X 24″H
3′	CRV-1603	1	CRV-1603-U	CRV-1603-G	222.6″W X 36″H	CRV-1603-GDBL	218.9″W X 36″H
4′	CRV-1604	1	CRV-1604-U	CRV-1604-G	222.6″W X 48″H	CRV-1604-GDBL	218.9″W X 48″H
5′	CRV-1605	1	CRV-1605-U	CRV-1605-G	222.6″W X 60″H	CRV-1605-GDBL	218.9″W X 60″H
6′	CRV-1606	1	CRV-1606-U	CRV-1606-G	222.6″W X 72″H	CRV-1606-GDBL	218.9″W X 72″H

CRV-18′ WIDTH							
HEIGHT	HARDWARE CODE	# OF BOXES OR CASES	UNPRINTED GRAPHIC CODE	SINGLE-SIDED GRAPHIC CODE	OUTER GRAPHIC SPECS	DOUBLE-SIDED GRAPHIC CODE	INSIDE GRAPHIC SPECS
2′	CRV-1802	1	CRV-1802-U	CRV-1802-G	250.4″W X 24″H	CRV-1802-GDBL	246.7″W X 24″H
3′	CRV-1803	1	CRV-1803-U	CRV-1803-G	250.4″W X 36″H	CRV-1803-GDBL	246.7″W X 36″H
4′	CRV-1804	1	CRV-1804-U	CRV-1804-G	250.4″W X 48″H	CRV-1804-GDBL	246.7″W X 48″H
5′	CRV-1805	1	CRV-1805-U	CRV-1805-G	250.4″W X 60″H	CRV-1805-GDBL	246.7″W X 60″H
6′	CRV-1806	1	CRV-1806-U	CRV-1806-G	250.4″W X 72″H	CRV-1806-GDBL	246.7″W X 72″H

CRV-20′ WIDTH							
HEIGHT	HARDWARE CODE	# OF BOXES OR CASES	UNPRINTED GRAPHIC CODE	SINGLE-SIDED GRAPHIC CODE	OUTER GRAPHIC SPECS	DOUBLE-SIDED GRAPHIC CODE	INSIDE GRAPHIC SPECS
2′	CRV-2002	1	CRV-2002-U	CRV-2002-G	278.2″W X 24″H	CRV-2002-GDBL	274.5″W X 24″H
3′	CRV-2003	1	CRV-2003-U	CRV-2003-G	278.2″W X 36″H	CRV-2003-GDBL	274.5″W X 36″H
4′	CRV-2004	1	CRV-2004-U	CRV-2004-G	278.2″W X 48″H	CRV-2004-GDBL	274.5″W X 48″H
5′	CRV-2005	1	CRV-2005-U	CRV-2005-G	278.2″W X 60″H	CRV-2005-GDBL	274.5″W X 60″H
6′	CRV-2006	1	CRV-2006-U	CRV-2006-G	278.2″W X 72″H	CRV-2006-GDBL	274.5″W X 72″H

***ALL GRAPHIC SIZES NOTED ARE FINISHED SIZES AND DO NOT INCLUDE REQUIRED BLEEDS. REFERENCE GRAPHIC TEMPLATES.**

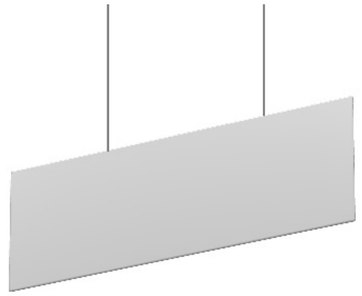

Unprinted graphic
black & white options

Single sided & double sided graphic

CRV-0802

SET UP INSTRUCTIONS:

1. CONNECT BOTTOM AND TOP TUBES FOLLOWING THE LABELS
2. CONNECT SIDE TUBES
3. CLEAN THE FRAME AND PLACE THEM ON CLEAN PLACE
4. CAREFULLY REMOVE FABRIC COVER FROM BAG
5. PLACE COVER AROUND THE BOTTOM OF THE FRAME
6. PULL COVER CAREFULLY UP TO THE TOP
7. CLOSE ALL ZIPPERS
8. ADJUST FABRIC AROUND THE FRAME
9. CONNECT CABLE HARNESS TO THE EYEBOLTS
10. COMPLETELY TIGHTEN THREADED CONNECTORS

BREAK DOWN INSTRUCTIONS:
REVERSE SET-UP STEPS TO BREAKDOWN FRAME

FABRIC CARE INSTRUCTIONS:
1. UNZIP COVER ZIPPERS
2. CAREFULLY REMOVE FABRIC COVER
3. CLOSE ALL ZIPPERS
4. FOLD OR ROLL NEATLY
5. PLACE FABRIC IN COVER BAG

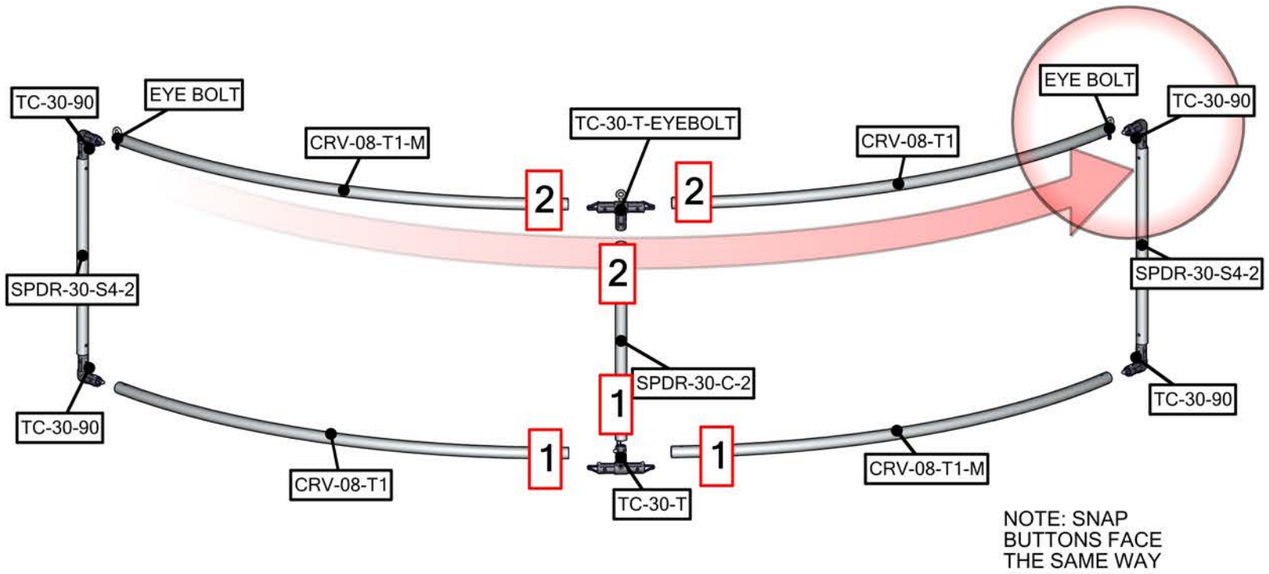

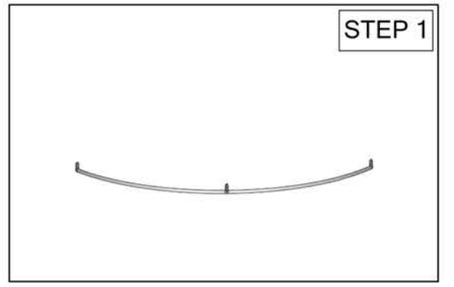

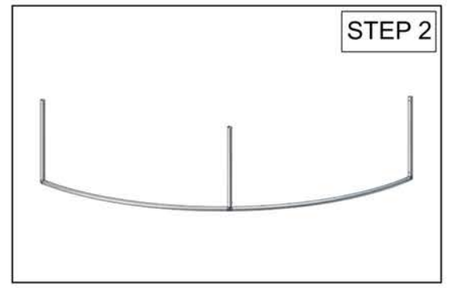

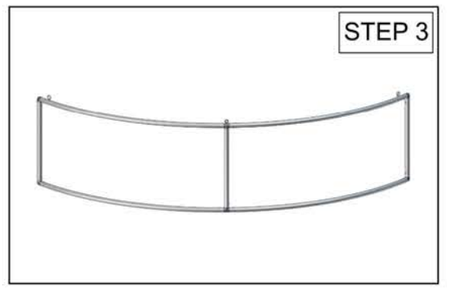

TOTAL WEIGHT: 10.3 (lbs)
MAX SIZE:51.9 (in)
HARDWARE: 7.0 (lbs)
GRAPHIC:2.6 (lbs)

QTY	CODE	DESCRIPTION
2	CRV-08-T1	TUBE 1 FOR 8' CURVED HANGING FABRIC STRUCTURES
2	EYE BOLT	1/4-20X1 EYE BOLT FOR INSTALLATION INTO RIVET NUTS
2	CRV-08-T1-M	TUBE 1 FOR 8' CURVED HANGING FABRIC STRUCTURES
3	LD-06	72" LENGTH 1/16" 7X7 GALVANIZED STEEL CABLE NATURAL VINYL COATED TO 3/32" OD
1	SPDR-30-C-2	30MM CURVED SPREADER FOR 2' STRUCTURES
2	SPDR-30-S4-2	30MM STRAIGHT SPREADER FOR TC-30-T JUNCTIONS OF 2' HIGH 30MM FABRIC STRUCTURE FRAMES
1	TC-30-T-EYEBOLT	T JUNCTION FOR 30MM TUBING

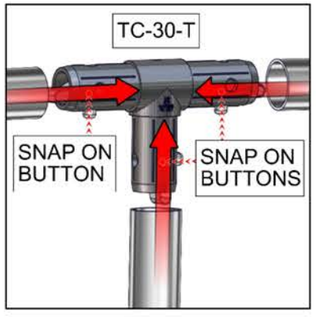

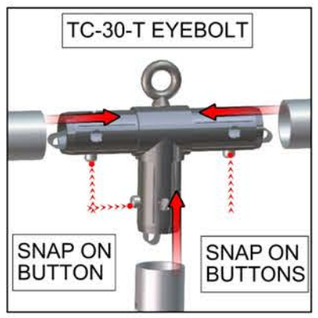

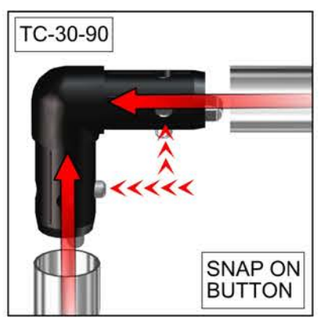

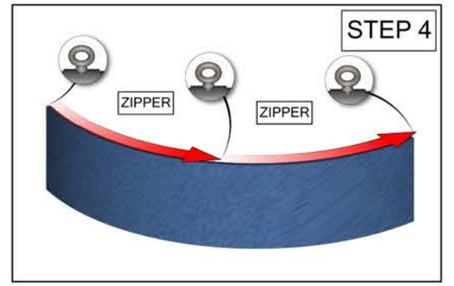

QR CODE

Set-up Video

CRV-0803

SET UP INSTRUCTIONS:

1. CONNECT BOTTOM AND TOP TUBES FOLLOWING THE LABELS
2. CONNECT SIDE TUBES
3. CLEAN THE FRAME AND PLACE THEM ON CLEAN PLACE
4. CAREFULLY REMOVE FABRIC COVER FROM BAG
5. PLACE COVER AROUND THE BOTTOM OF THE FRAME
6. PULL COVER CAREFULLY UP TO THE TOP
7. CLOSE ALL ZIPPERS
8. ADJUST FABRIC AROUND THE FRAME
9. CONNECT CABLE HARNESS TO THE EYEBOLTS
10. COMPLETELY TIGHTEN THREADED CONNECTORS

BREAK DOWN INSTRUCTIONS:
REVERSE SET-UP STEPS TO BREAKDOWN FRAME

FABRIC CARE INSTRUCTIONS:
1. UNZIP COVER ZIPPERS
2. CAREFULLY REMOVE FABRIC COVER
3. CLOSE ALL ZIPPERS
4. FOLD OR ROLL NEATLY
5. PLACE FABRIC IN COVER BAG

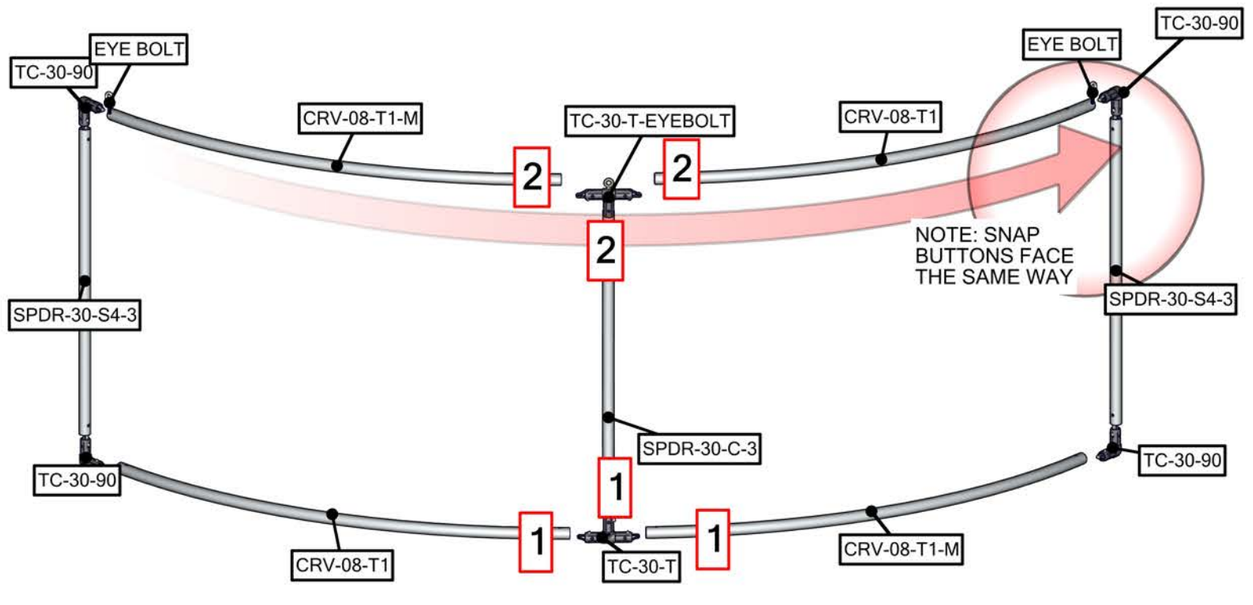

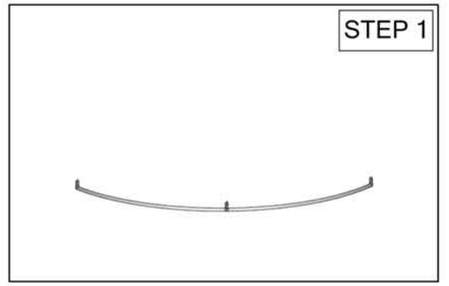

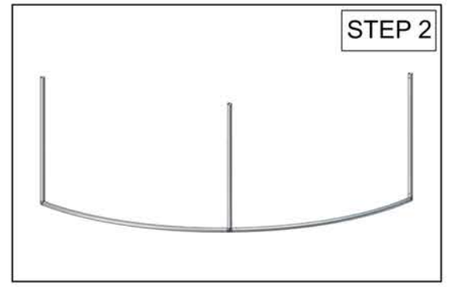

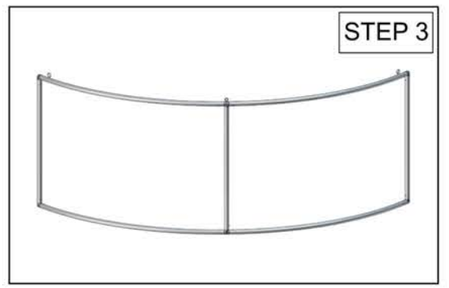

TOTAL WEIGHT: 12.7 (lbs)
MAX SIZE:51.9 (in)
HARDWARE: 8.0 (lbs)
GRAPHIC:3.9 (lbs)

QTY	CODE	DESCRIPTION
2	CRV-08-T1	TUBE 1 FOR 8' CURVED HANGING FABRIC STRUCTURES
2	EYE BOLT	1/4-20X1 EYE BOLT FOR INSTALLATION INTO RIVET NUTS
2	CRV-08-T1-M	TUBE 1 FOR 8' CURVED HANGING FABRIC STRUCTURES
3	LD-06	72" LENGTH 1/16" 7X7 GALVANIZED STEEL CABLE NATURAL VINYL COATED TO 3/32" OD
1	SPDR-30-C-3	30MM CURVED SPREADER FOR 3' STRUCTURES
2	SPDR-30-S4-3	30MM STRAIGHT SPREADER FOR TC-30-T JUNCTIONS OF 3' HIGH 30MM FABRIC STRUCTURE FRAMES
1	TC-30-T-EYEBOLT	T JUNCTION FOR 30MM TUBING
1	TC-30-T	T JUNCTION FOR 30MM TUBING

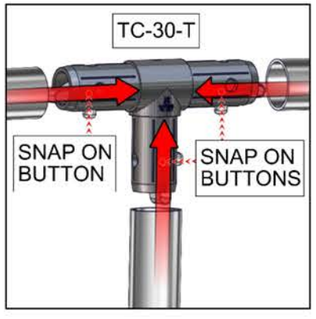

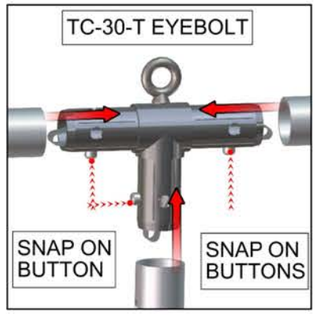

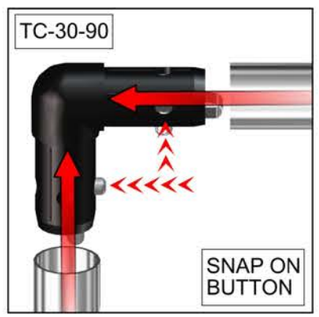

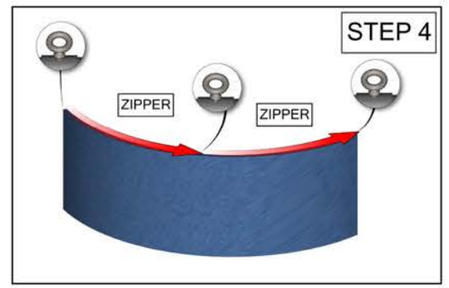

QR CODE

Set-up Video

CRV-0804

SET UP INSTRUCTIONS:

1. CONNECT BOTTOM AND TOP TUBES FOLLOWING THE LABELS
2. CONNECT SIDE TUBES
3. CLEAN THE FRAME AND PLACE THEM ON CLEAN PLACE
4. CAREFULLY REMOVE FABRIC COVER FROM BAG
5. PLACE COVER AROUND THE BOTTOM OF THE FRAME
6. PULL COVER CAREFULLY UP TO THE TOP
7. CLOSE ALL ZIPPERS
8. ADJUST FABRIC AROUND THE FRAME
9. CONNECT CABLE HARNESS TO THE EYEBOLTS
10. COMPLETELY TIGHTEN THREADED CONNECTORS

BREAK DOWN INSTRUCTIONS:
REVERSE SET-UP STEPS TO BREAKDOWN FRAME

FABRIC CARE INSTRUCTIONS:
1. UNZIP COVER ZIPPERS
2. CAREFULLY REMOVE FABRIC COVER
3. CLOSE ALL ZIPPERS
4. FOLD OR ROLL NEATLY
5. PLACE FABRIC IN COVER BAG

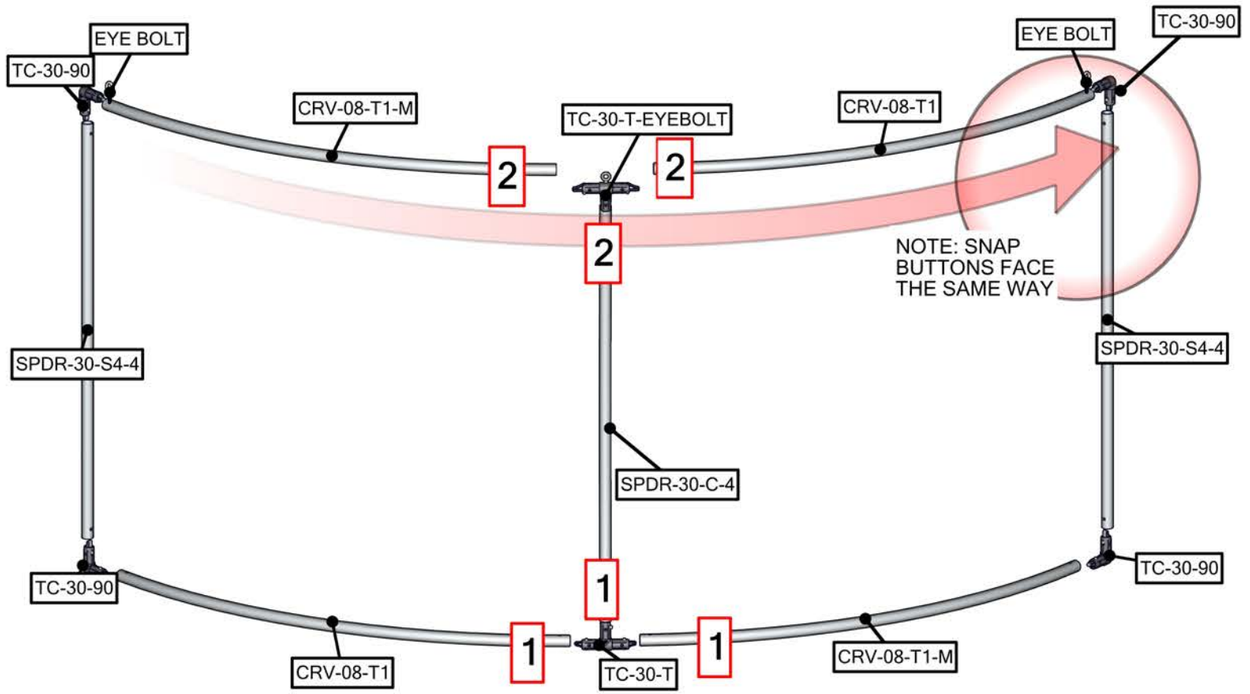

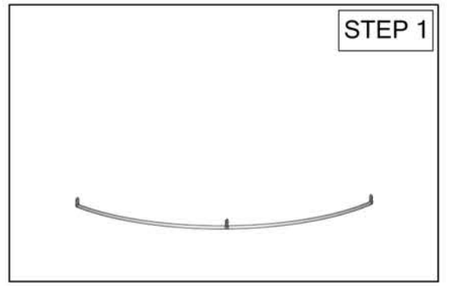

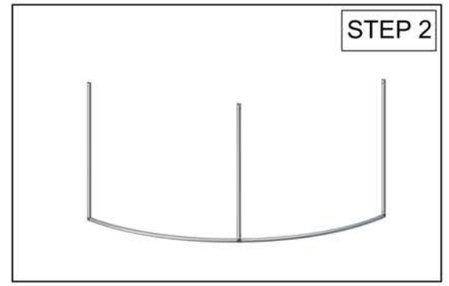

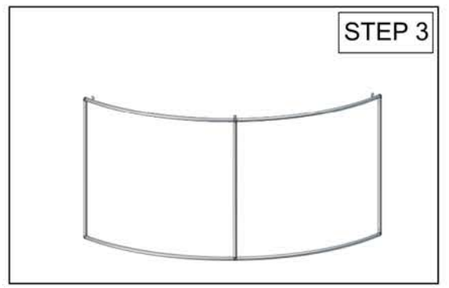

TOTAL WEIGHT: 15.0 (lbs)
MAX SIZE:51.9 (in)
HARDWARE: 9.0 (lbs)
GRAPHIC:5.1 (lbs)

QTY	CODE	DESCRIPTION
2	CRV-08-T1	TUBE 1 FOR 8' CURVED HANGING FABRIC STRUCTURES
2	EYE BOLT	1/4-20X1 EYE BOLT FOR INSTALLATION INTO RIVET NUTS
2	CRV-08-T1-M	TUBE 1 FOR 8' CURVED HANGING FABRIC STRUCTURES
3	LD-06	72" LENGTH 1/16" 7X7 GALVANIZED STEEL CABLE NATURAL VINYL COATED TO 3/32" OD
1	SPDR-30-C-4	30MM CURVED SPREADER FOR 4' STRUCTURES
2	SPDR-30-S4-4	30MM STRAIGHT SPREADER FOR TC-30-T JUNCTIONS OF 4' HIGH 30MM FABRIC STRUCTURE FRAMES
1	TC-30-T-EYEBOLT	T JUNCTION FOR 30MM TUBING
1	TC-30-T	T JUNCTION FOR 30MM TUBING

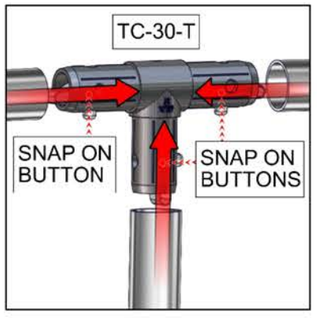

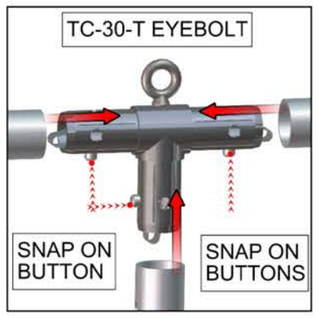

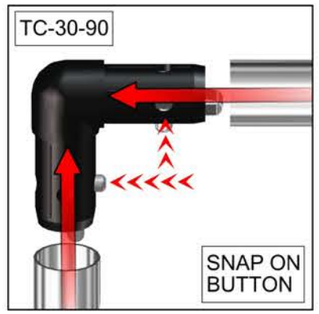

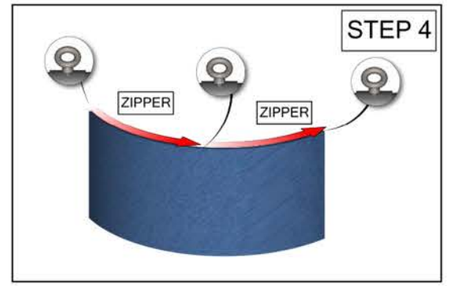

QR CODE

Set-up Video

CRV-0805

SET UP INSTRUCTIONS:

1. CONNECT BOTTOM AND TOP TUBES FOLLOWING THE LABELS
2. CONNECT SIDE TUBES
3. CLEAN THE FRAME AND PLACE THEM ON CLEAN PLACE
4. CAREFULLY REMOVE FABRIC COVER FROM BAG
5. PLACE COVER AROUND THE BOTTOM OF THE FRAME
6. PULL COVER CAREFULLY UP TO THE TOP
7. CLOSE ALL ZIPPERS
8. ADJUST FABRIC AROUND THE FRAME
9. CONNECT CABLE HARNESS TO THE EYEBOLTS
10. COMPLETELY TIGHTEN THREADED CONNECTORS

BREAK DOWN INSTRUCTIONS:
REVERSE SET-UP STEPS TO BREAKDOWN FRAME

FABRIC CARE INSTRUCTIONS:
1. UNZIP COVER ZIPPERS
2. CAREFULLY REMOVE FABRIC COVER
3. CLOSE ALL ZIPPERS
4. FOLD OR ROLL NEATLY
5. PLACE FABRIC IN COVER BAG

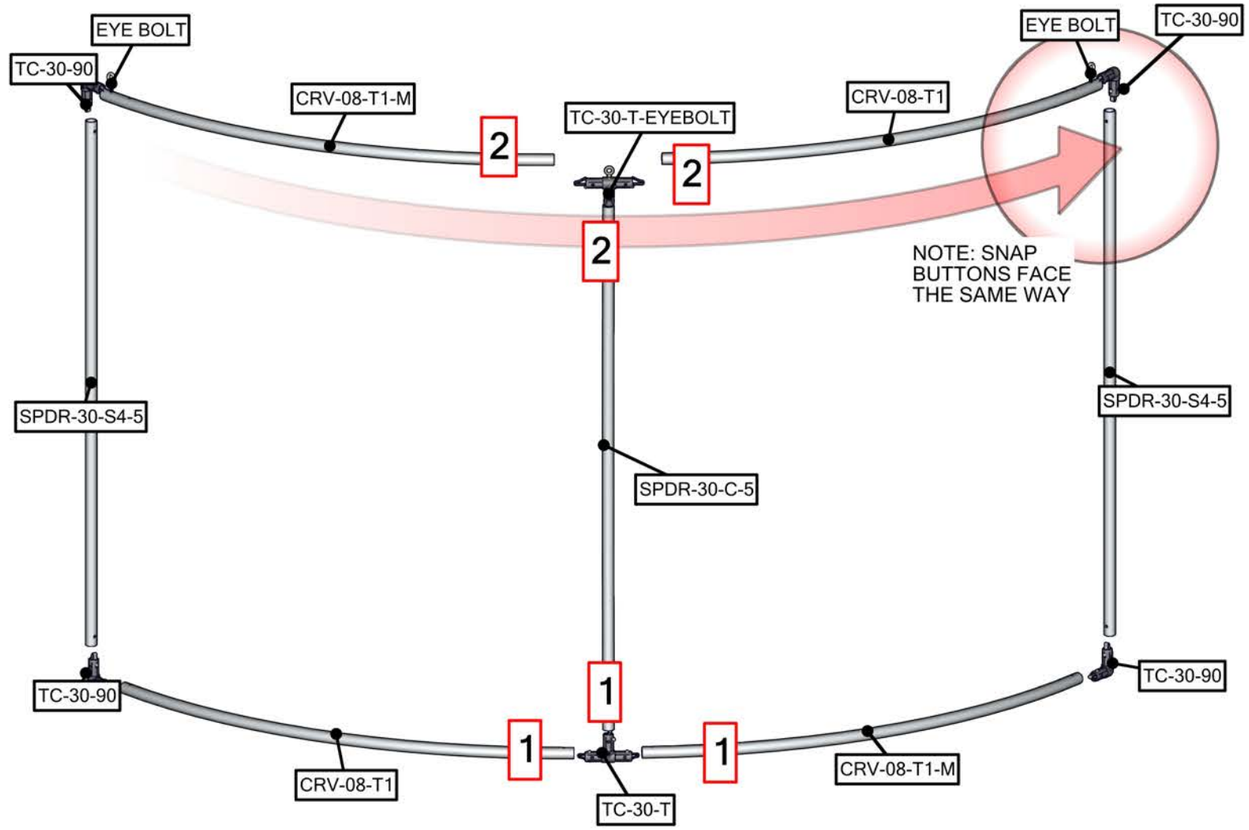

TOTAL WEIGHT: 17.4 (lbs)
MAX SIZE:51.9 (in)
HARDWARE:10.0 (lbs)
GRAPHIC:6.4 (lbs)

QTY	CODE	DESCRIPTION
2	CRV-08-T1	TUBE 1 FOR 8' CURVED HANGING FABRIC STRUCTURES
2	EYE BOLT	1/4-20X1 EYE BOLT FOR INSTALLATION INTO RIVET NUTS
2	CRV-08-T1-M	TUBE 1 FOR 8' CURVED HANGING FABRIC STRUCTURES
3	LD-06	72" LENGTH 1/16" 7X7 GALVANIZED STEEL CABLE NATURAL VINYL COATED TO 3/32" OD
1	SPDR-30-C-5	30MM CURVED SPREADER FOR 5' STRUCTURES
2	SPDR-30-S4-5	30MM STRAIGHT SPREADER FOR TC-30-T JUNCTIONS OF 5' HIGH 30MM FABRIC STRUCTURE FRAMES
1	TC-30-T-EYEBOLT	T JUNCTION FOR 30MM TUBING
1	TC-30-T	T JUNCTION FOR 30MM TUBING

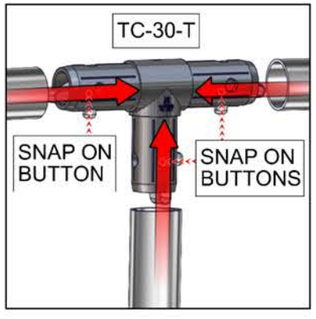

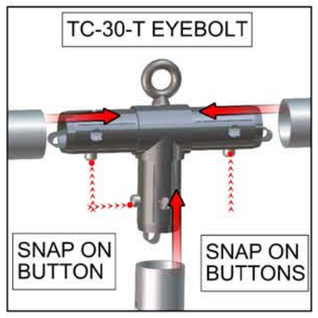

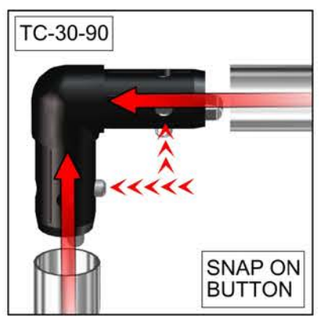

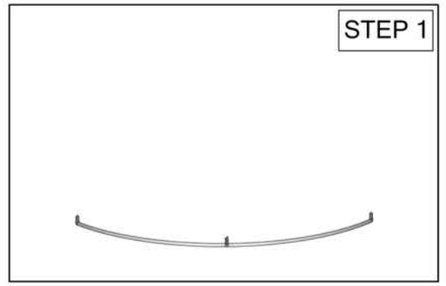

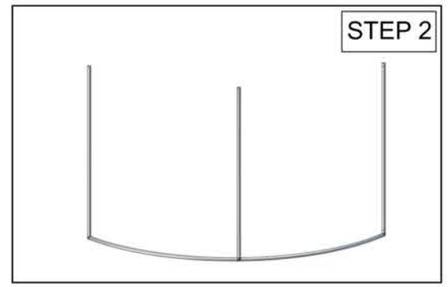

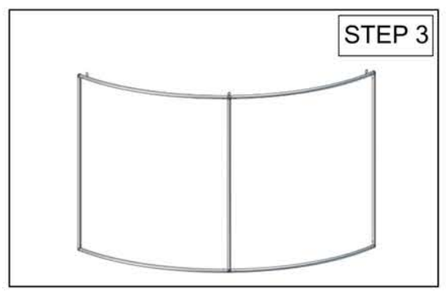

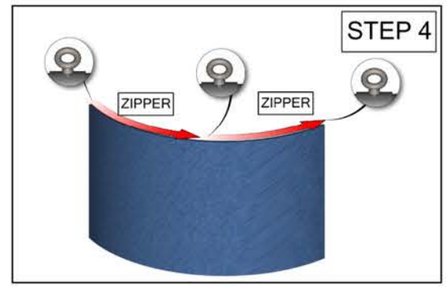

QR CODE

Set-up Video

CRV-0806

SET UP INSTRUCTIONS:

1. CONNECT BOTTOM AND TOP TUBES FOLLOWING THE LABELS
2. CONNECT SIDE TUBES
3. CLEAN THE FRAME AND PLACE THEM ON CLEAN PLACE
4. CAREFULLY REMOVE FABRIC COVER FROM BAG
5. PLACE COVER AROUND THE BOTTOM OF THE FRAME
6. PULL COVER CAREFULLY UP TO THE TOP
7. CLOSE ALL ZIPPERS
8. ADJUST FABRIC AROUND THE FRAME
9. CONNECT CABLE HARNESS TO THE EYEBOLTS
10. COMPLETELY TIGHTEN THREADED CONNECTORS

BREAK DOWN INSTRUCTIONS:
REVERSE SET-UP STEPS TO BREAKDOWN FRAME

FABRIC CARE INSTRUCTIONS:
1. UNZIP COVER ZIPPERS
2. CAREFULLY REMOVE FABRIC COVER
3. CLOSE ALL ZIPPERS
4. FOLD OR ROLL NEATLY
5. PLACE FABRIC IN COVER BAG

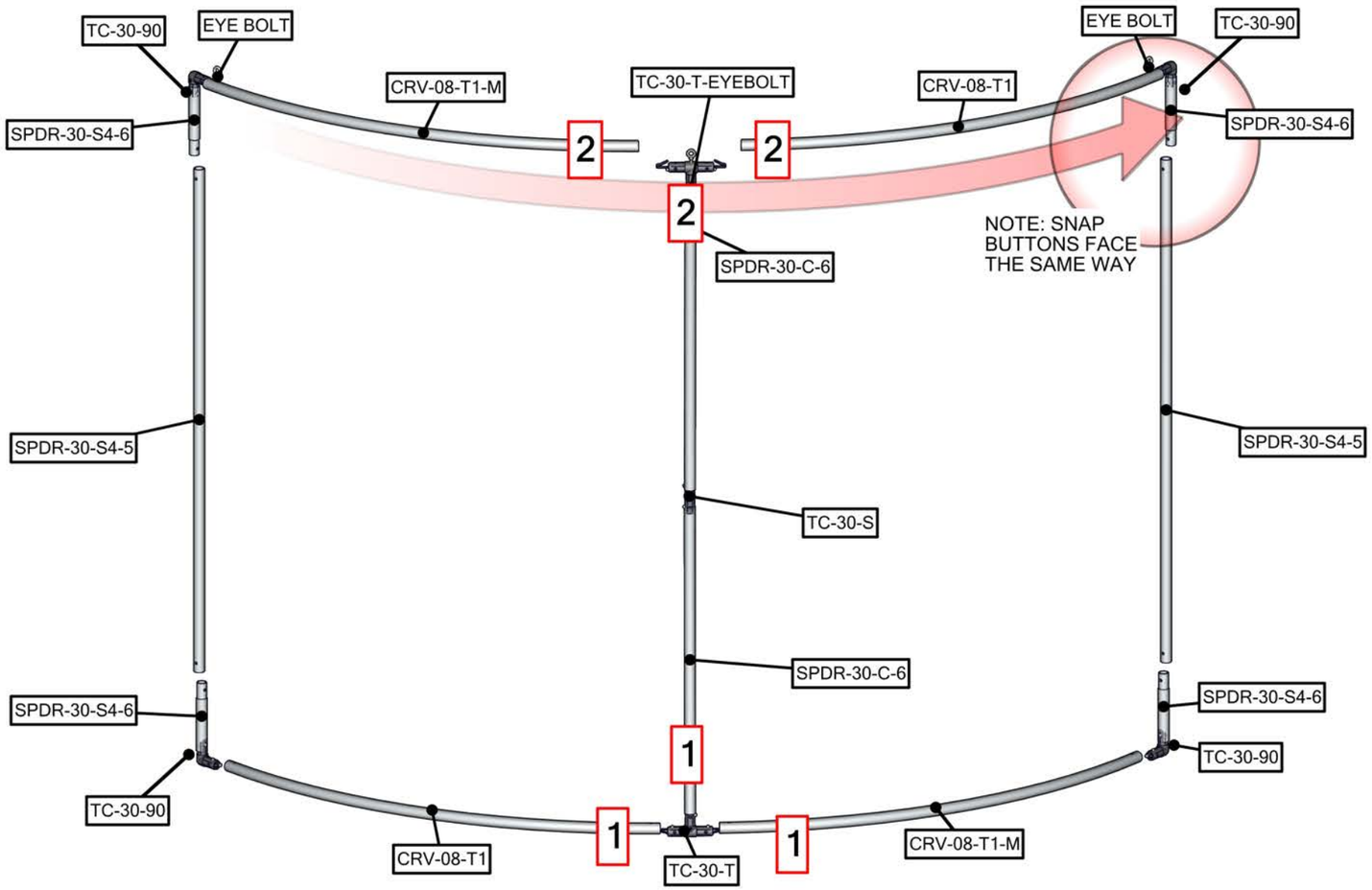

TOTAL WEIGHT: 19.8 (lbs)
MAX SIZE:51.9 (in)
HARDWARE: 11.0 (lbs)
GRAPHIC: 7.7 (lbs)

QTY	CODE	DESCRIPTION
2	CRV-08-T1	TUBE 1 FOR 8' CURVED HANGING FABRIC STRUCTURES
2	EYE BOLT	1/4-20X1 EYE BOLT FOR INSTALLATION INTO RIVET NUTS
2	CRV-08-T1-M	TUBE 1 FOR 8' CURVED HANGING FABRIC STRUCTURES
3	LD-06	72" LENGTH 1/16" 7X7 GALVANIZED STEEL CABLE NATURAL VINYL COATED TO 3/32" OD
2	SPDR-30-C-6	30MM CURVED SPREADER FOR 6' STRUCTURES
4	SPDR-30-S4-6	30MM STRAIGHT SPREADER FOR TC-30-T JUNCTIONS OF 6' HIGH 30MM FABRIC STRUCTURE FRAMES
2	SPDR-30-S4-5	30MM STRAIGHT SPREADER FOR TC-30-T JUNCTIONS OF 5' HIGH 30MM FABRIC STRUCTURE FRAMES
1	TC-30-T-EYEBOLT	T JUNCTION FOR 30MM TUBING
1	TC-30-T	T JUNCTION FOR 30MM TUBING

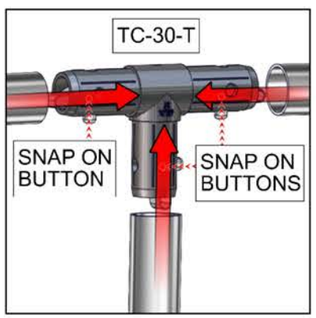

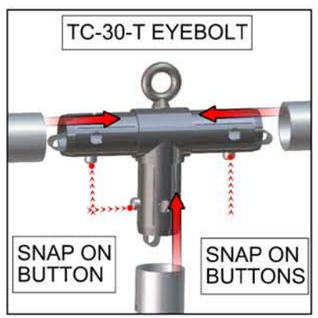

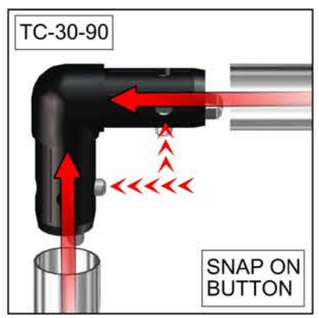

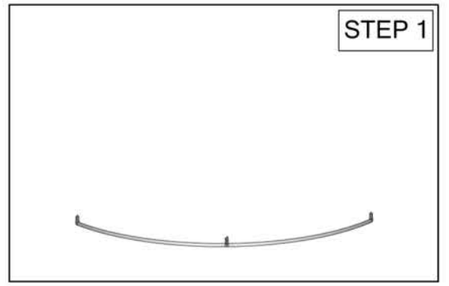

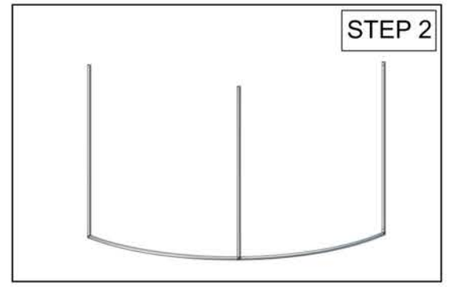

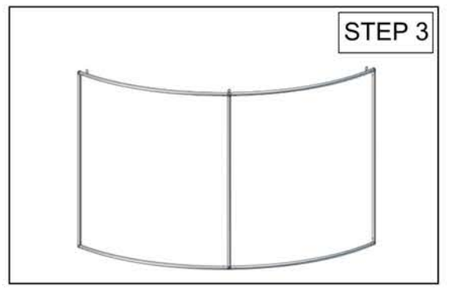

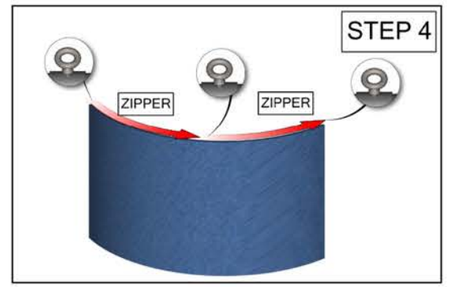

QR CODE

Set-up Video