Over the Top - 8ft Tall Wall

Kit Item# 280325
Banner Only Item# 280345

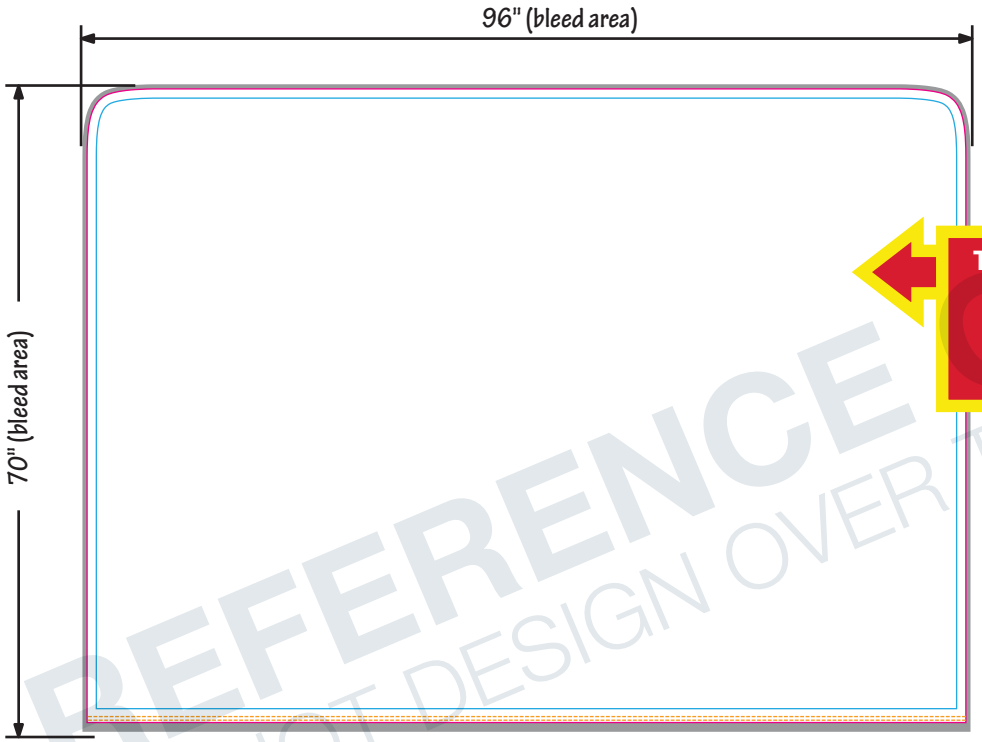

THIS IS A DOUBLE SIDED PRODUCT
PLEASE SUBMIT (2) PRINT FILES
(1) for FRONT LAYOUT
(1) for BACK LAYOUT

REFERENCE ONLY
DO NOT DESIGN OVER TEMPLATE

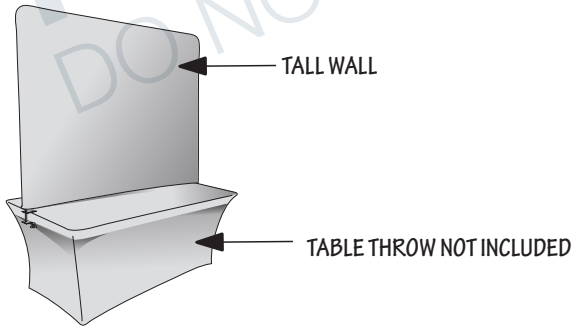

TEMPLATE KEY

= BLEED AREA
= FINISHED SIZE
= SAFE AREA
= STITCH LINE

BLEED AREA
96"W x 70"H
(.5" on all sides/1" on bottom)
Area of art that is used for finishing product. Background color/image should extend into this area.

FINISHED SIZE
95"W x 68.5"H
Area of art that is visible after finishing product. Background color/image should extend into the bleed area.

STITCH LINE
double stitch hem on bottom

SAFE AREA
93"W x 66"H
Recommended area to place artwork. Artwork within this area will be safe from variance in cut of finished edge /stitch line.

FOR REFERENCE ONLY
PLEASE SEND IN ART
SET UP TO FULL SIZE
layout guide on page 2

Using PMS colors in your art is recommended but an exact match cannot be guaranteed.

- **All images must be embedded**
- **All fonts must be outlined.**

Dye-Sub products are printed CMYK (4 color) process from your art file.

ACCEPTABLE FILE FORMATS:

Vector lines **Vector image**

- Adobe Illustrator (.ai, .pdf, .eps)
- All Fonts Outlined
- Images Embedded

Raster image

- Adobe Photoshop (.psd, .tif, .jpg)
- 200 DPI at 100% Scale

Updated: 02.04.14

TEMPLATE KEY

= BLEED AREA

= FINISHED SIZE

= SAFE AREA

= STITCH LINE

CUSTOMER NOTE:

- **Design each print file on its own artboard to the bleed area size. (2) print files total**

1-Front/1-Back: 96″ **W x** 70″ **H**

- **All images must be embedded.**
- **All fonts must be in outline format.**

THIS IS A DOUBLE SIDED PRODUCT

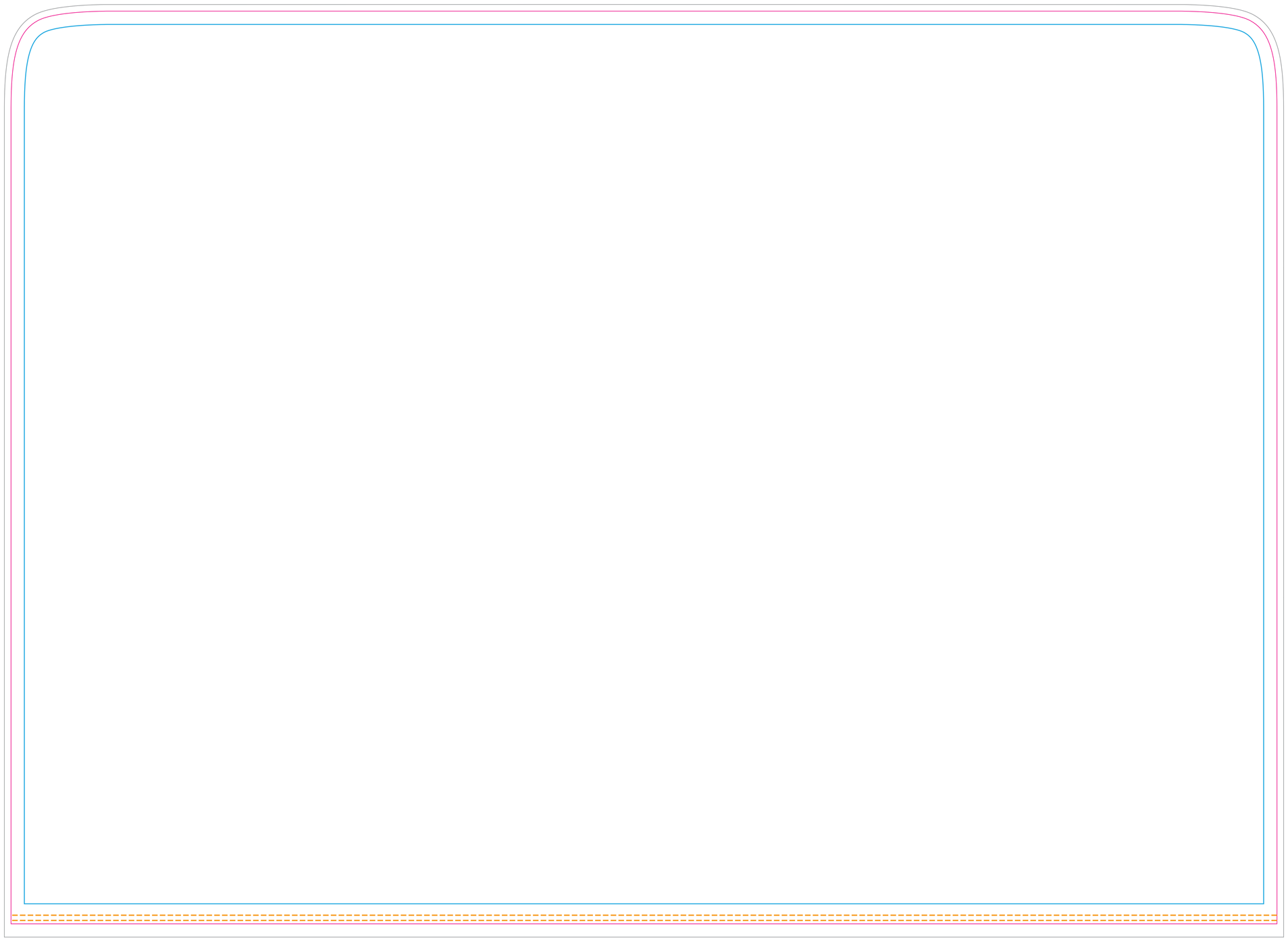

FRONT SIDE

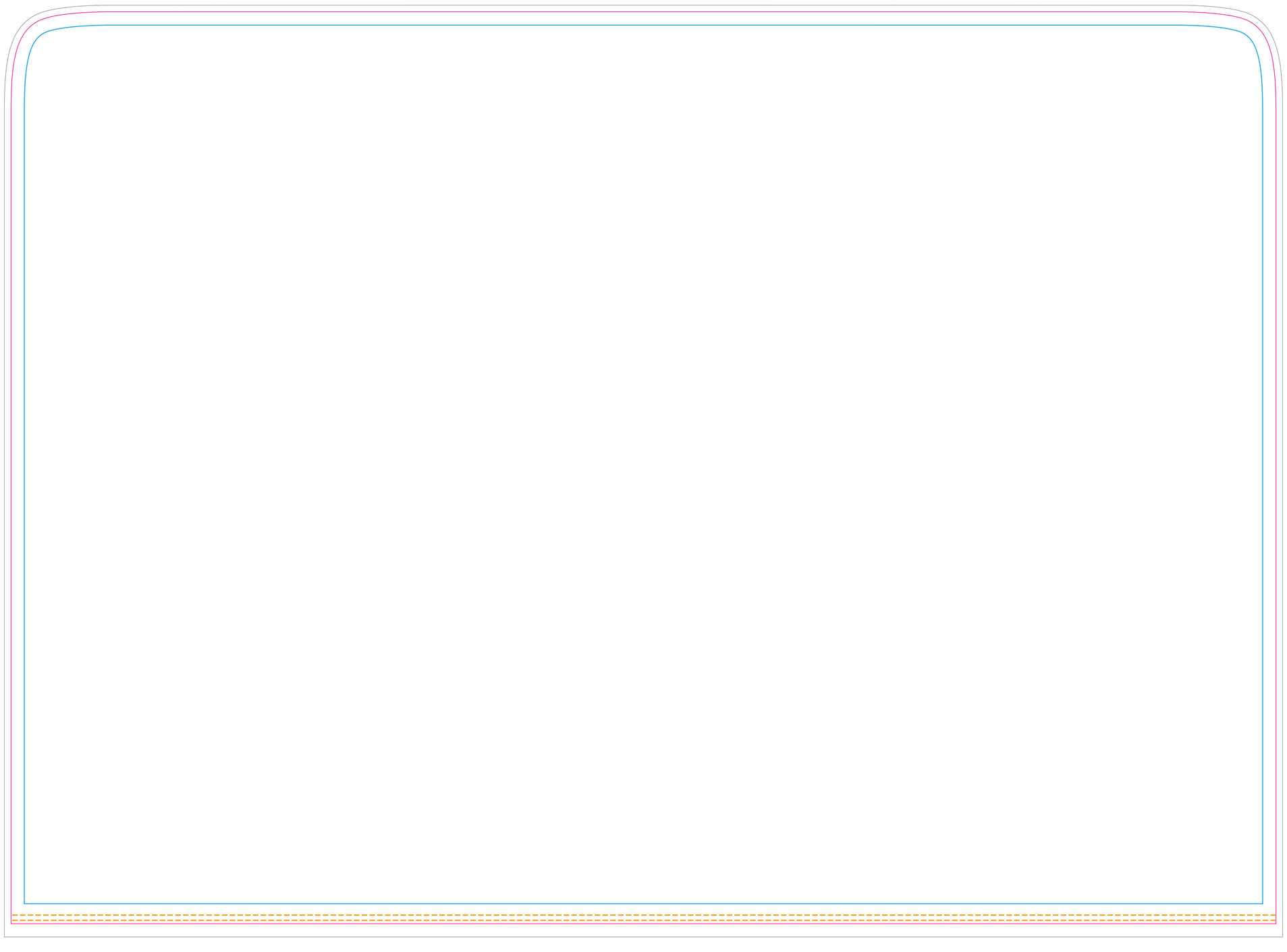

BACK SIDE