BSD935A PEDESTAL SNAP FRAME

Total Graphic Size: 8.5” x 11”
Total Viewable Size: 8” x 10.5”

Recommended Material
Photo Paper

Please keep all Text and or Graphics
1” from all sides

UV ink based products are printed
cmyk (4 color) process from your file
PMS color matching is not guaranteed

ACCEPTABLE FILE FORMATS:

Vector lines

Vector image

* Adobe Illustrator (.ai, .pdf, .eps)
* All Fonts Outlined/images embedded

Raster image

*100 DPI AT 100%
*Adobe Photoshop - .psd
* .tif, or .jpg

All images must be embedded and fonts must be outlined
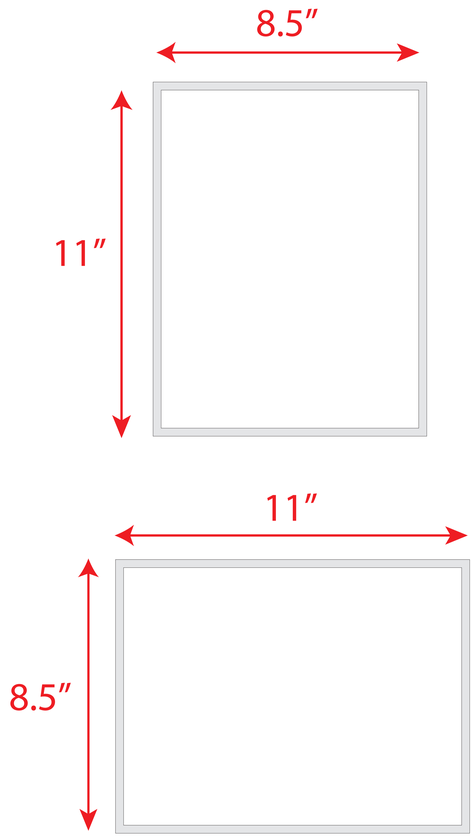
UPDATED: 4.20.2010