Formulate 20’ Serpentine - Kit 3

FMLT-WSC20-03

Formulate™ is a collection of sophisticated, ergonomically designed exhibit booths. Formulate combines state-of-the-art zipper pillowcase dye-sublimated fabric coverings with advanced lightweight aluminum structures to provide unique design, functionality, and style. The excellence of the Formulate line of displays, hanging structures and products is simply unmatched. Stretch fabric graphics are hand-sewn, durable and dry-cleanable.

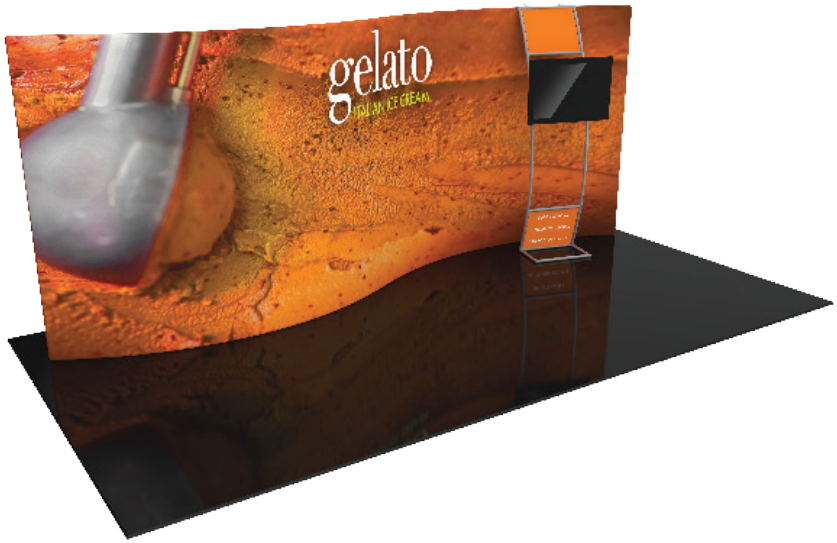

features and benefits:

- State-of-the-art 50mm aluminum tubing with heavy duty internal spigot connectors
- Hardware mounts for a medium sized monitor; max 36”/ 40 lbs
- Top and bottom printed infill panels on accent ladder
- Kit includes: one frame, one dye-sublimated zipper pillowcase graphic, and two wheeled molded OCL and one OCH2 storage cases
- Lifetime hardware warranty against manufacturer defects

dimensions:

Hardware	Graphic
Assembled unit: 226.0280”w x 93.3830”h x 32.7808”d Stand-off Monitor mount: 23.6”w x 92.7”h x 26.6”d Approximate weight (includes graphic): 88 lbs / 39.5 kgs	Total visual area: 236.5”w x 92”h s-curve 6007mm(w) x 2337mm(h) Stand-off ladder total visual area: Top & bottom: 21”w x 17”h Please be sure to include a 2” bleed around the perimeter of dye-sublimated graphic and a 1/2” bleed around the perimeter of PVC stand-off graphics. Refer to related graphic template for more information. Visit: www.exhibitors-handbook.com/graphic-templates
Shipping	
Shipping dimensions - ships in 3 cases: 2 OCL cases (each): 19”l x 19”w x 56”h 1 OCH2 case: 52”l x 30”w x 15”h Approximate shipping weight (with case): 158 lbs / 71.6 kgs	

additional information:

Graphic material: dye-sublimated zipper pillowcase fabric, 3mm white pvc

Monitor mount: max T.V. size is 36”/ 40 lbs
*Kit does not include monitor

www.display-setup-animations.com

We are continually improving and modifying our product range and reserve the right to vary the specifications without prior notice. All dimensions and weights quoted are approximate and we accept no responsibility for variance. E&OE. See Graphic Templates for graphic bleed specifications.

Parts Included		
Part Label	**Qty**	**Part Code**
EXPANDING SPIGOT FOR 50MM TUBE	x14	ES-50
20’ FABRIC GRAPHIC	x1	WSC20-01-G
INLINE CONNECTOR FOR 30MM TUBING	x3	TC-30-S
50MM CORNER TUBE	x4	WSC20-T1
300MM X 50MM TUBE	x2	WSC20-T2
R2736MM X 50MM TUBE	x4	WSC20-T3
R2736MM X 50MM CURVED TUBE WITH HOLE RIGHT SIDE	x2	WSC20-T3-HR
R2736MM X 50MM CURVED TUBE WITH HOLE LEFT SIDE	x2	WSC20-T3-HL
1093MM X 30MM TUBE	x6	WSC20-T4

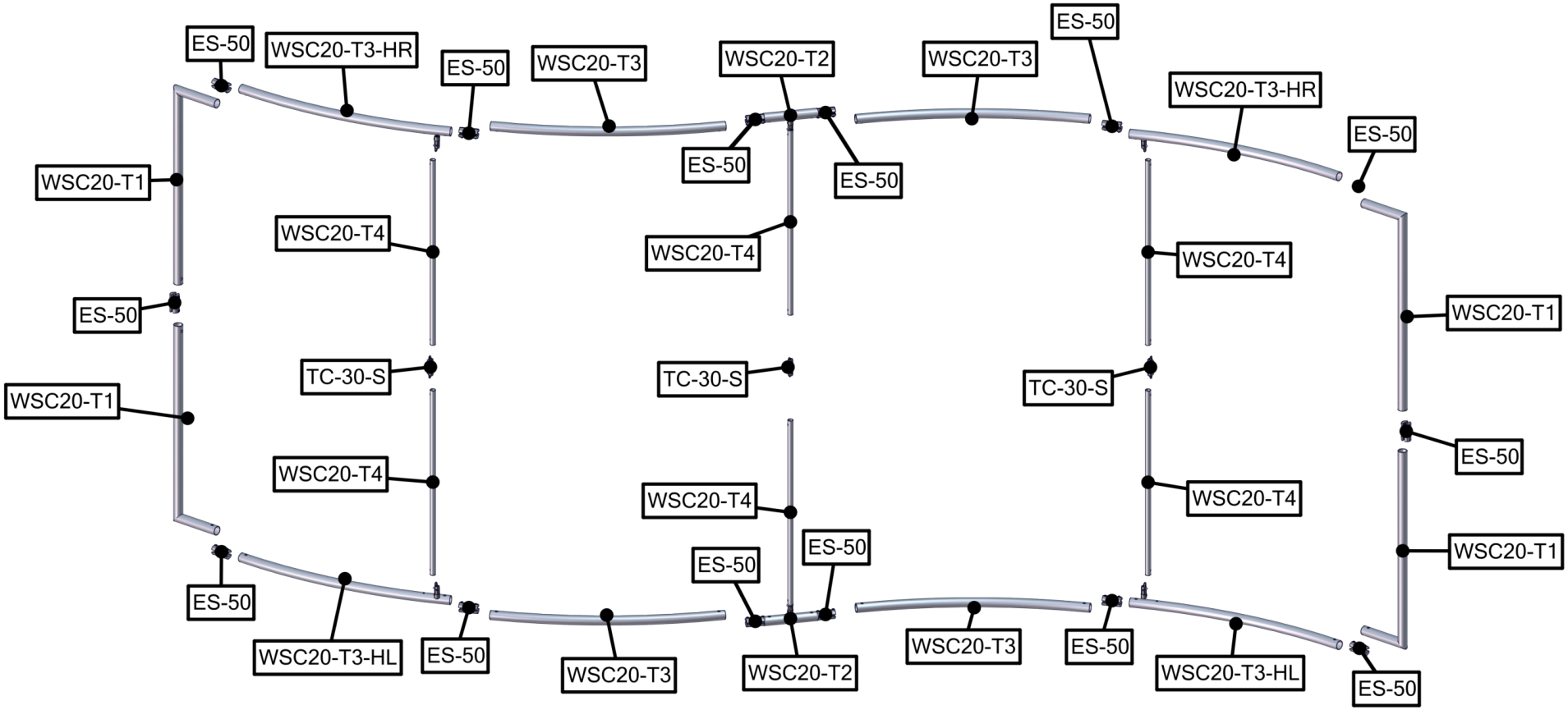

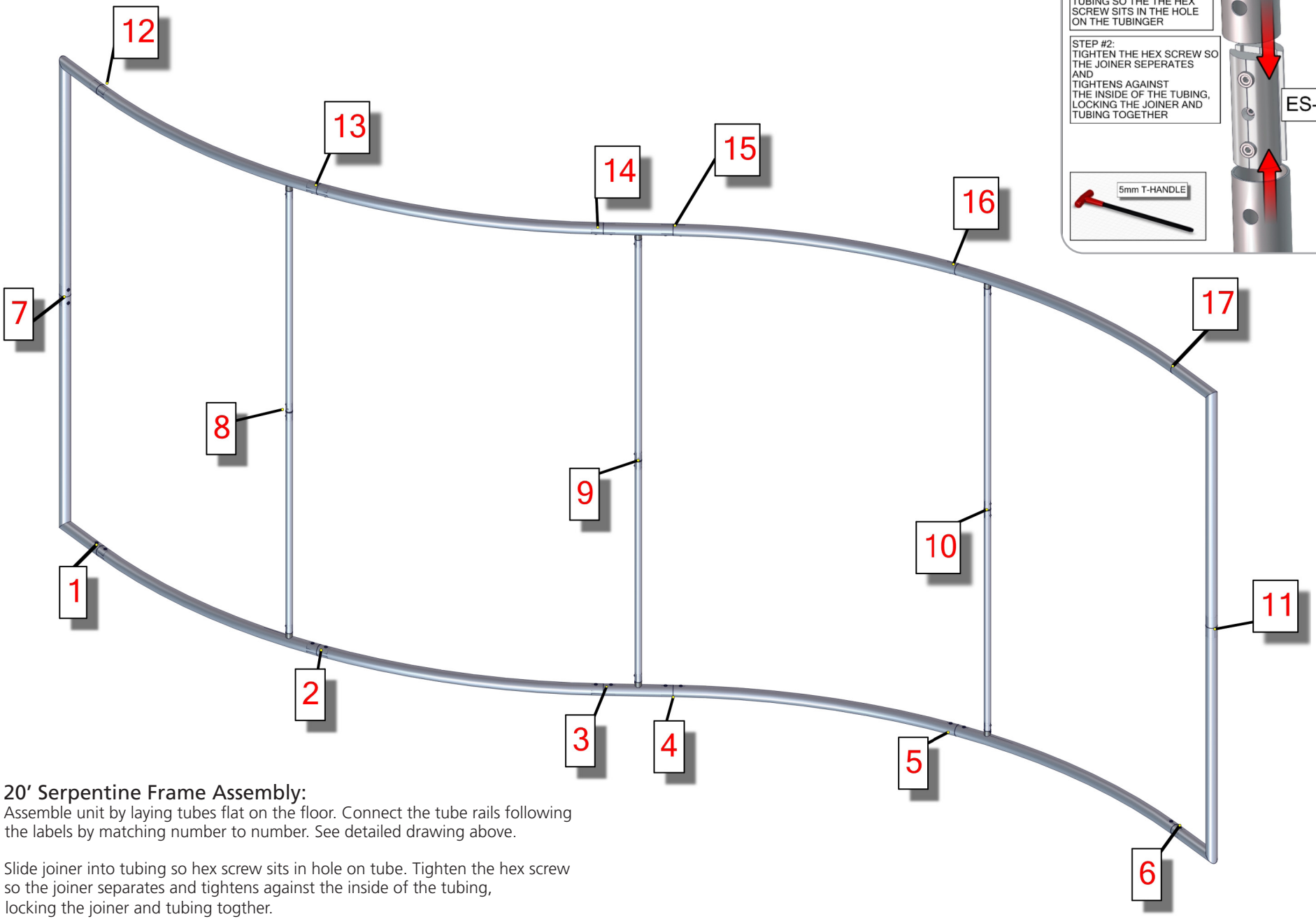

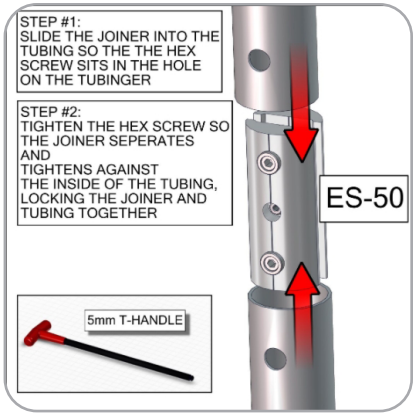

20’ Serpentine Frame Assembly:

Assemble unit by laying tubes flat on the floor. Connect the tube rails following the labels by matching number to number. See detailed drawing above.

Slide joiner into tubing so hex screw sits in hole on tube. Tighten the hex screw so the joiner separates and tightens against the inside of the tubing, locking the joiner and tubing togther.

At connection 8, 9 and 10, connect tubes by pressing snap on button, lining up holes and securing button in hole.

Parts Included		
Part Label	**Qty**	**Part Code**
MEDIUM MONITOR BRACKET	x1	MM-MB
SILVER ANODIZE FINISH 50MM TUBE CLAMP	x2	TC-30-50
30MM TUBE SECTION	x2	WL-T3
TOP SINTRA GRAPHICS	x2	WLLH-T-G
30MM TUBE SECTION	x1	WL-T13
30MM TUBE SECTION	x1	WL-T6
30MM TUBE SECTION	x1	WL-T7

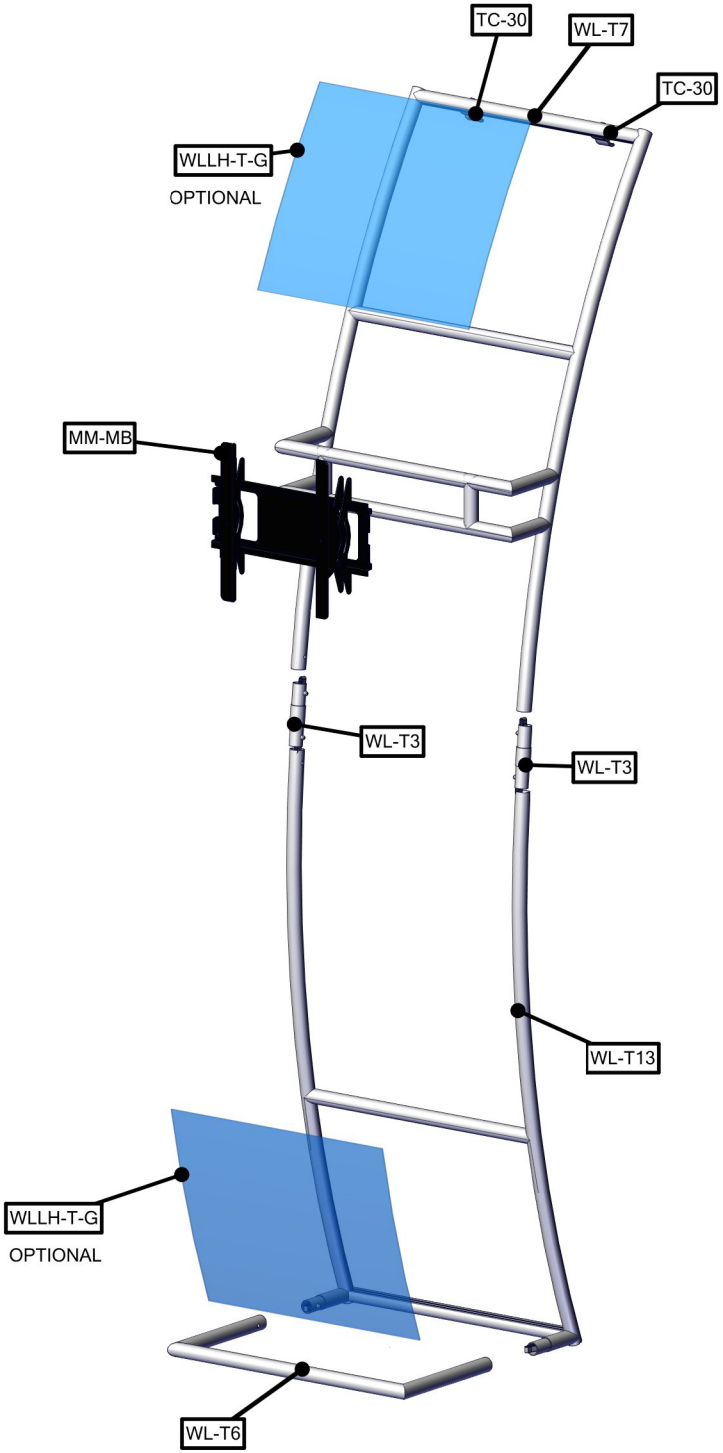

STEP 1: ASSEMBLE FRAME

Connect tubes following the labels matching number to number.

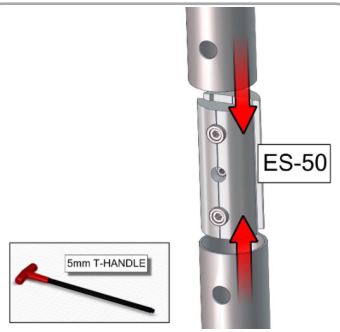

50MM TUBES: Slide joiner into the tubing so the hex screw sits in the hole on the tubinger and tighten.

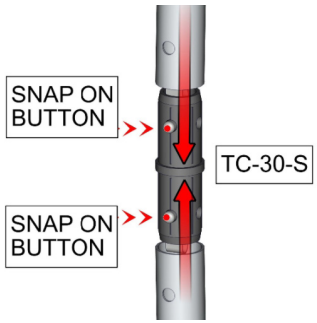

Using inline connector TC-30-S, connect interior tubes of frame.

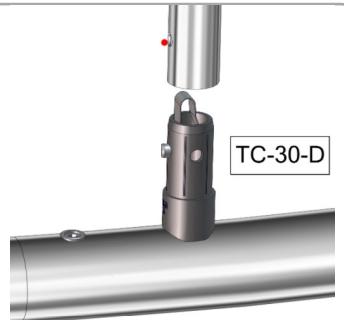

Interior tubes of frame connect to top/bottom with TC-30-D by pressing snap on button.

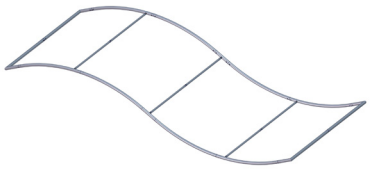

Continue connecting frame following the labels matching number to number.

STEP 2: ATTACH GRAPHIC

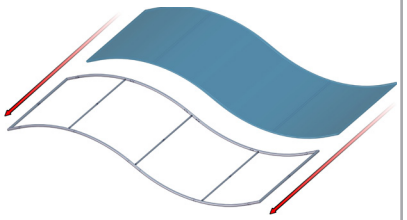

Pull graphic over top of frame.

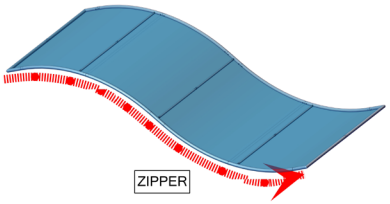

Zip graphic closed along bottom.

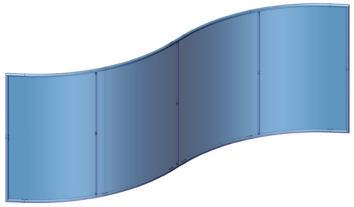

Unit is complete.

STEP 3: ASSEMBLE FRAME

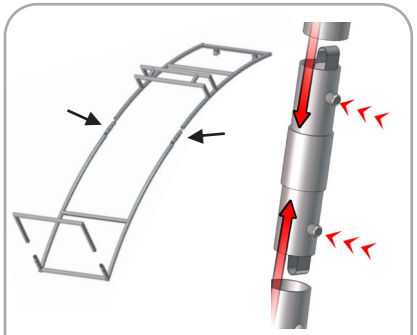

First connect top accent frame to bottom using WL-T3.

Next connect accent frame to base.

STEP 4: INSTALL MONITOR MOUNT

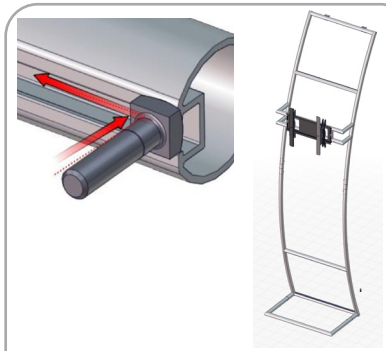

Slide bolts into tube channel. Center monitor mount on hardware.

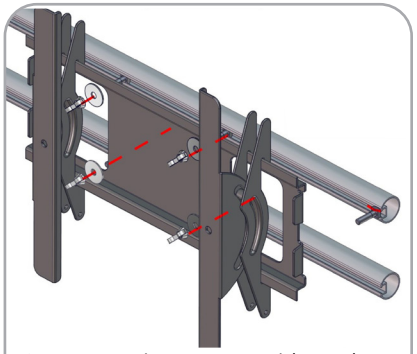

Secure monitor mount with washers and wingnuts.

STEP 5: ATTACH GRAPHICS

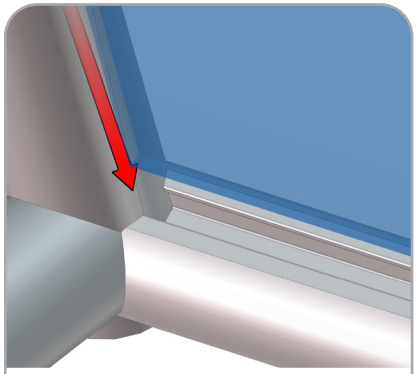

Slide infill panels into channels.

STEP 6: ATTACH TO BACKWALL WITH CLAMPS

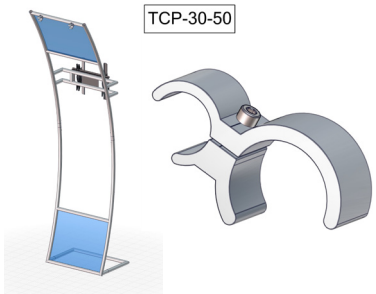

Tube clamps will come attached to frame. Position accent in front of backwall in desired location.

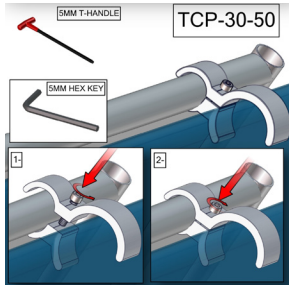

Using provided 5mm hex key, rotate bolt clockwise to secure accent to top of fabric backwall.