Formulate:
Essential 8′ Straight Wall Double Sided

TEMPLATE IS @ 1/2 SIZE
(2) prints to make (1) double sided graphic
Total Graphic Area: 101″w X 94.5″h
Total Visual Area: 97″w X 90.5″h

Please be sure to include the 2″ bleed around the perimeter (note trim & stitch locations on template). DO NOT design any critical elements (text, logos, etc.) within 2″ of the edge.

General Art Guidelines:

- CMYK Color Mode
- All Solid Coated Pantone colors should be called out in the art as spot colors
- Embed all images and support files
- Resolution must be 200-240 ppi @ 1/2 size, 100-120ppi @ 100% size
- All fonts must be created to outlines
- Do not scale artboard
- Background color/images must bleed to the edge of artboard
- Do not use spot colors from template in your artwork as they will not print

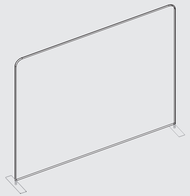

FRONT GRAPHIC

BACK GRAPHIC

bleed area
trim line
safe zone

Formulate:
Essential 8' Straight Wall Double Sided

TEMPLATE IS @ 1/2 SIZE
(2) prints to make (1) double sided graphic
Total Graphic Area: 101"w X 94.5"h
Total Visual Area: 97"w X 90.5"h

Please be sure to include the 2" bleed around the perimeter (note trim & stitch locations on template). DO NOT design any critical elements (text, logos, etc.) within 2" of the edge.

General Art Guidelines:

- CMYK Color Mode
- All Solid Coated Pantone colors should be called out in the art as spot colors
- Embed all images and support files
- Resolution must be 200-240 ppi @ 1/2 size, 100-120ppi @ 100% size
- All fonts must be created to outlines
- Do not scale artboard
- Background color/images must bleed to the edge of artboard
- Do not use spot colors from template in your artwork as they will not print

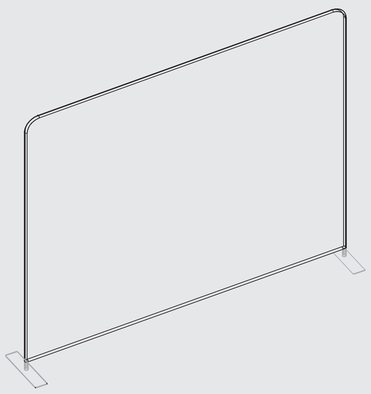

FRONT GRAPHIC

BACK GRAPHIC

bleed area
trim line
safe zone