linear kiosk

Linear Kiosk 2

Top Wing Graphic
Total graphic area: 16"w X 48.25"h
Total visual area: 15"w X 47.25"h

Consider monitor placement & size when design top wing graphic. Depending on size of monitor, it may block part of the left wing.

Bottom Wing Graphic
Total graphic area: 16"w X 40.3125"h
Total visual area: 15"w X 39.3125"h

Please be sure to include the 1/2" bleed around the perimeter to compensate for the finishing of the rigid sintra graphics.

Pillowcase Canopy Graphic
Total graphic area: 51.25"w X 27.25"d
Total visual area: 47.25"w X 23.25"d

Please be sure to include the 2" bleed for the pillowcase canopy graphic. Do not design any critical elements (text, logos, etc.) within 1" of the edge (see dotted lines).
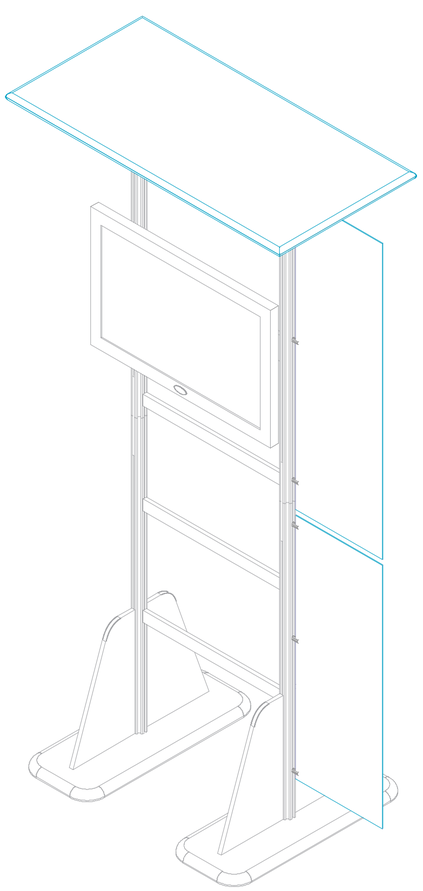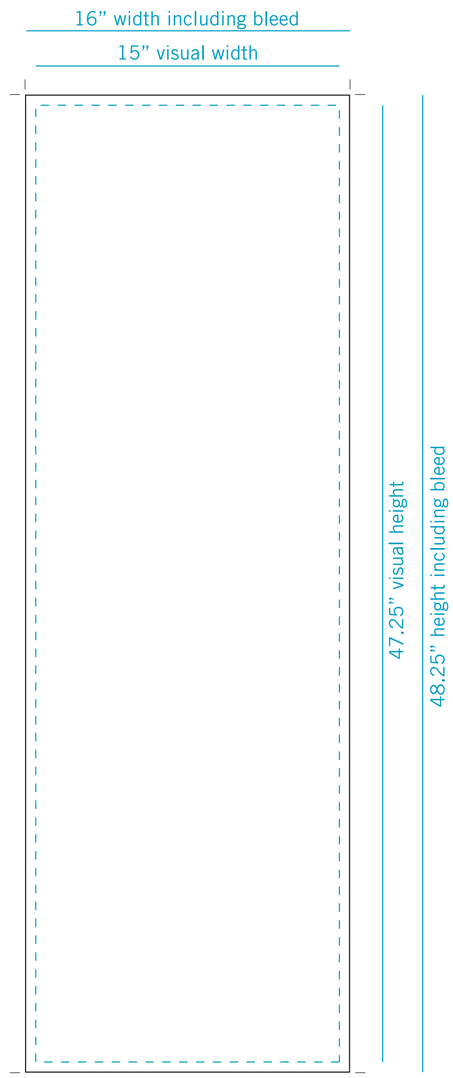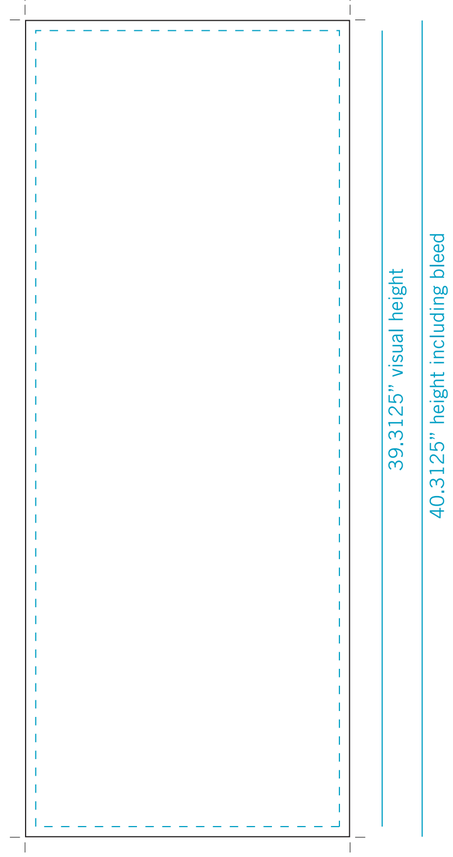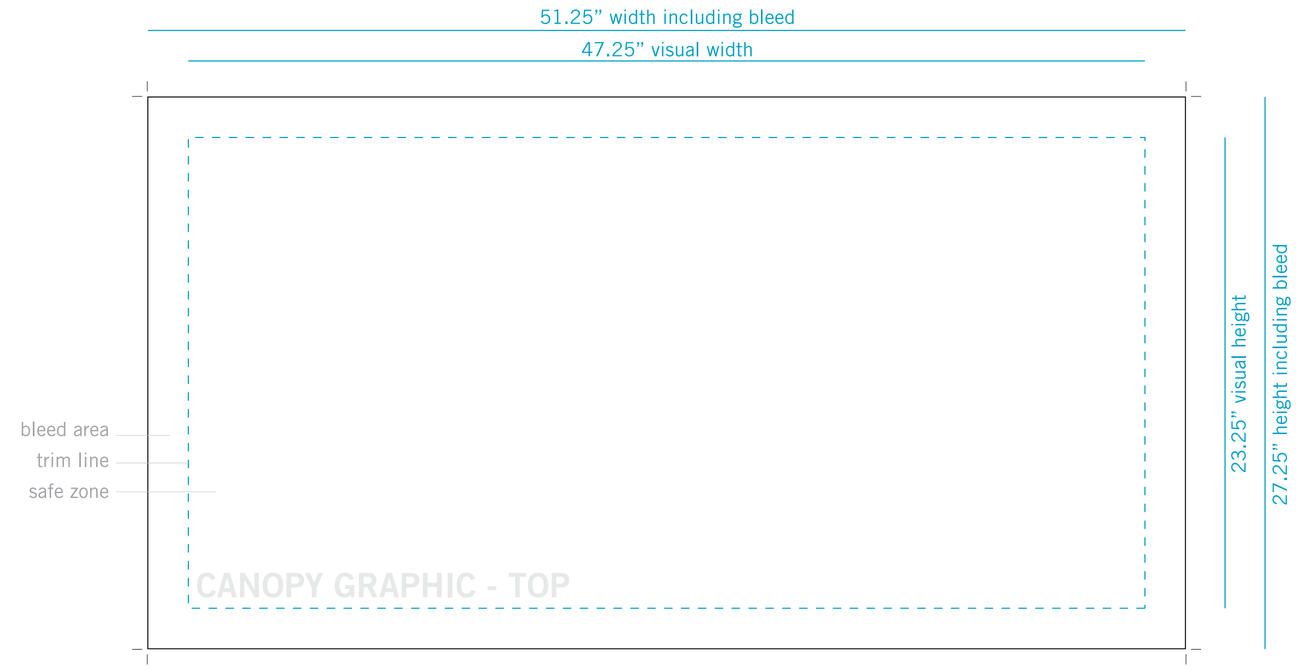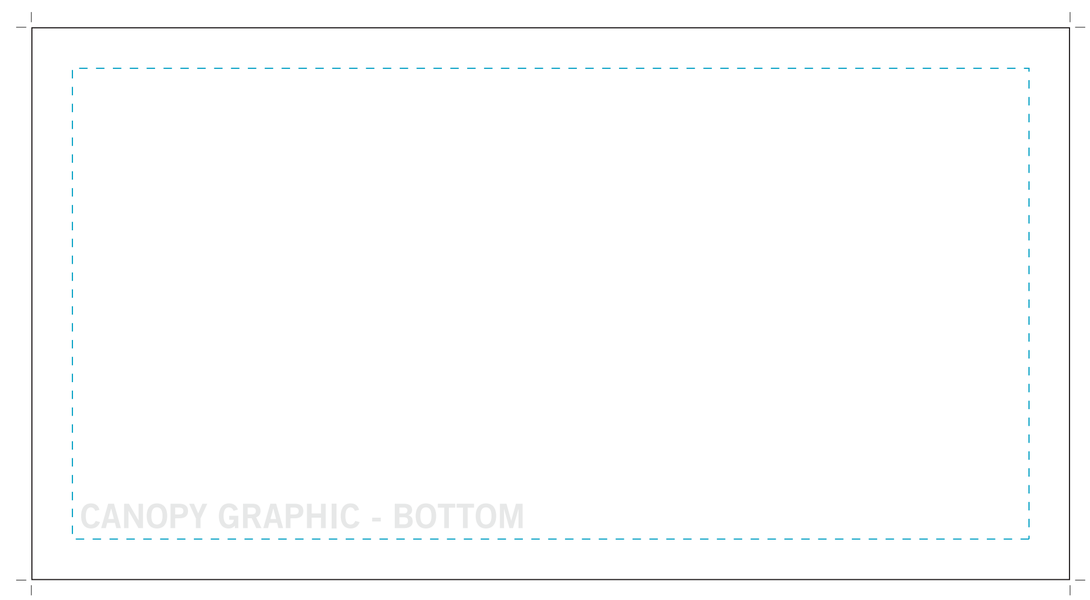
General Artwork Guidelines
- cmyk color mode
- do not embed images, supply them
- resolution must be 100-120 ppi
- all fonts must be created to outlines