linear kiosk

Linear Kiosk Kit 07

Side Panels
Total graphic area: 12.811"w X 36.433"h
Total visual area: 11.811"w x 35.433"h

Please be sure to include the 1/2" bleed around the perimeter to compensate for the finishing of the rigid sintra graphics.

Please extend bleed all the way out to the black border.
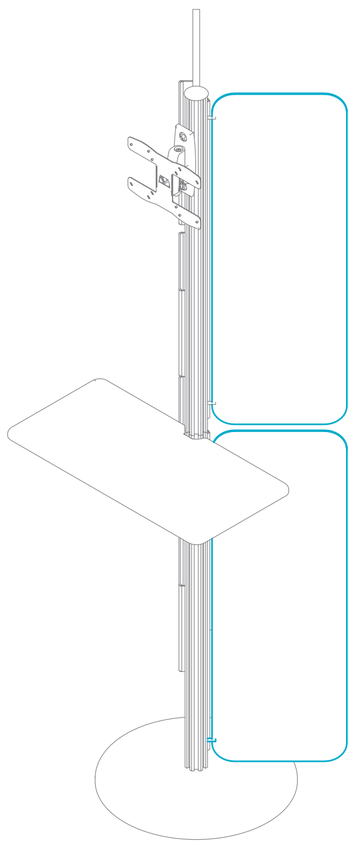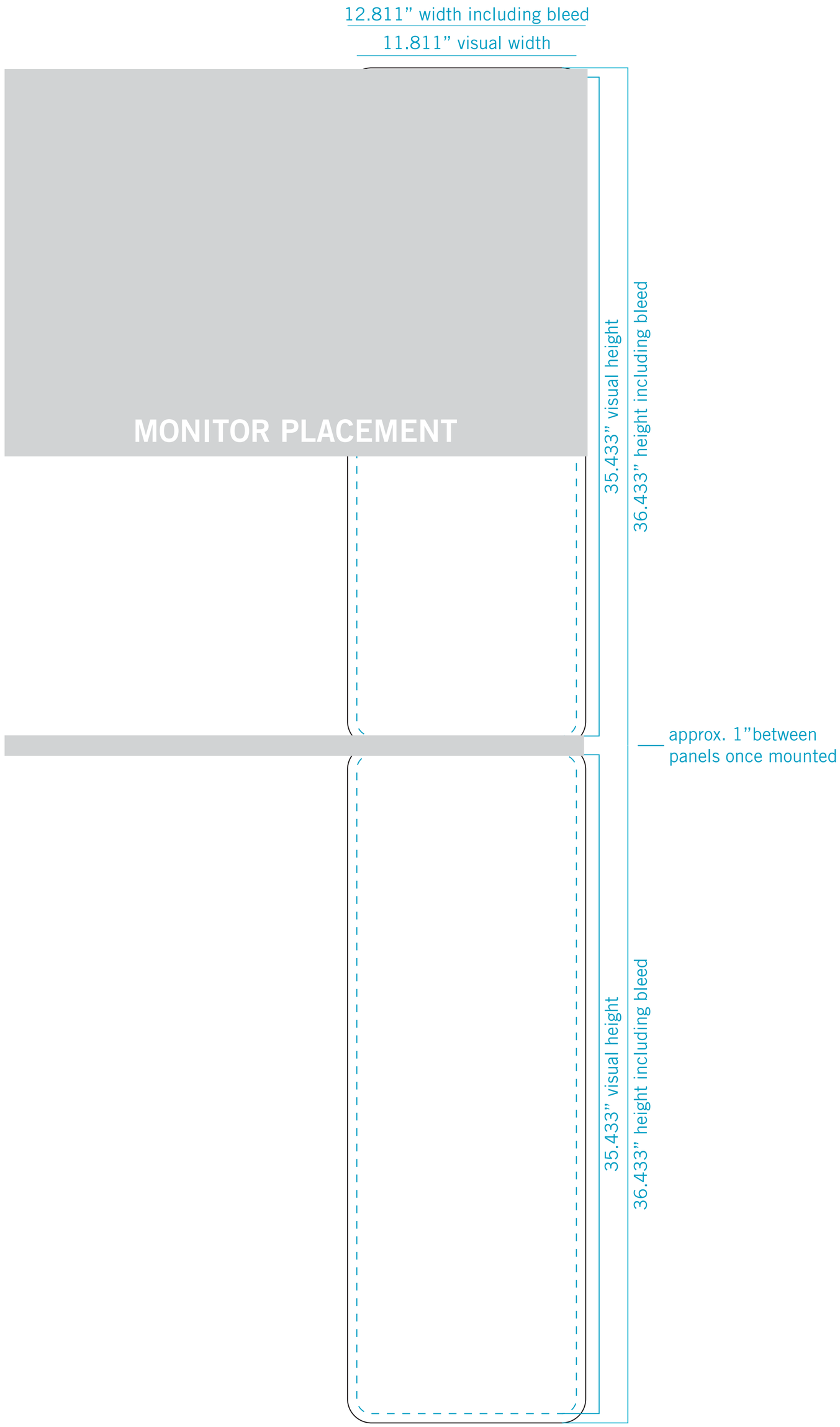
General Artwork Guidelines
- cmyk color mode
- do not embed images, supply them
- resolution must be 100-120 ppi
- all fonts must be created to outlines