Vector Frame
Concave Curve 03

Graphic Code: VF-CR-03-CC-G
Total graphic area: 65.0625”w X 98.375”h
Total finished area: 61.0625”w X 94.375”h

Please be sure to include the 2“ bleed around the perimeter (note trim & stitch locations on template). DO NOT design any critical elements (text, logos, etc.) within 1” of the edge.

please include separate design built on VF-CR-03-CV-G template if you are ordering a double sided display.

General Art Guidelines:

- CMYK Color Mode
- All Solid Coated Pantone colors should be called out in the art as spot colors
- Embed all images and support files
- Resolution must be 100-120 ppi
- All fonts must be created to outlines
- Do not scale artboard
- Background color/images must bleed to the edge of artboard
- Do not use spot colors from template in your artwork as they will not print

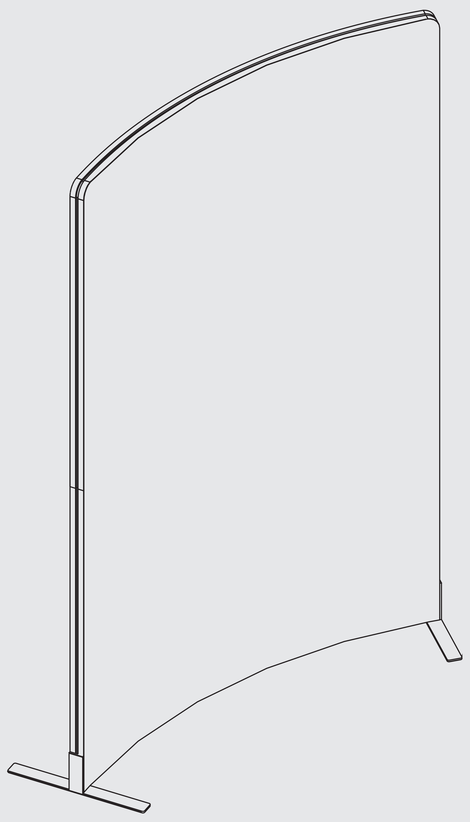

bleed area
trim line
safe zone